1062H4 = 100109
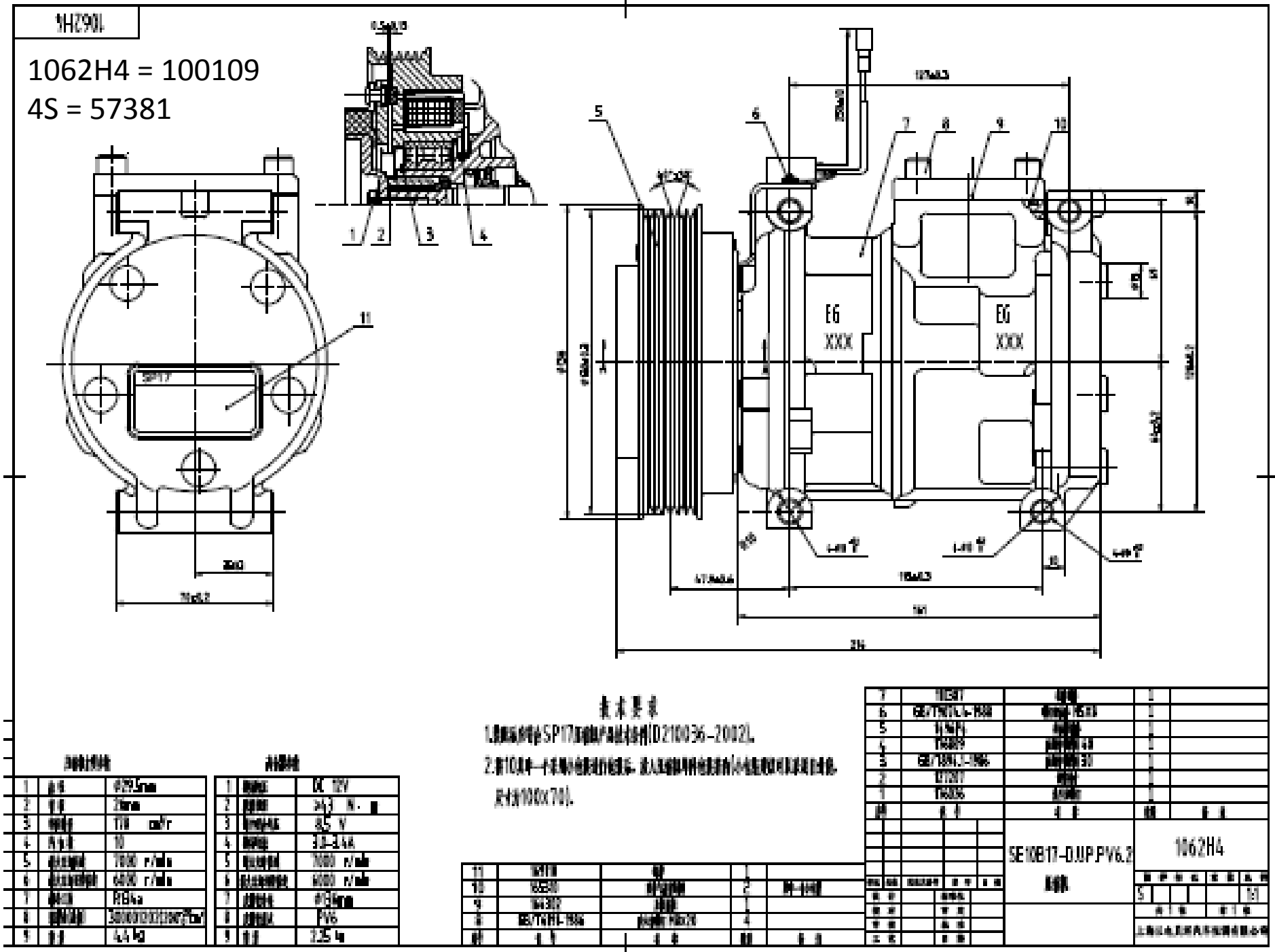
4S = 57381