PDCN	REV.	APPV DATE	REVISIONS	DWN	DSGN	CHK	APPV
	1		INITIAL ISSUE				
2007258	2	03/25/08	6520-6340 (3GE) FIELD COIL ASSY WAS 6746-6140 (3DS)	TG	TG	SN	EMA

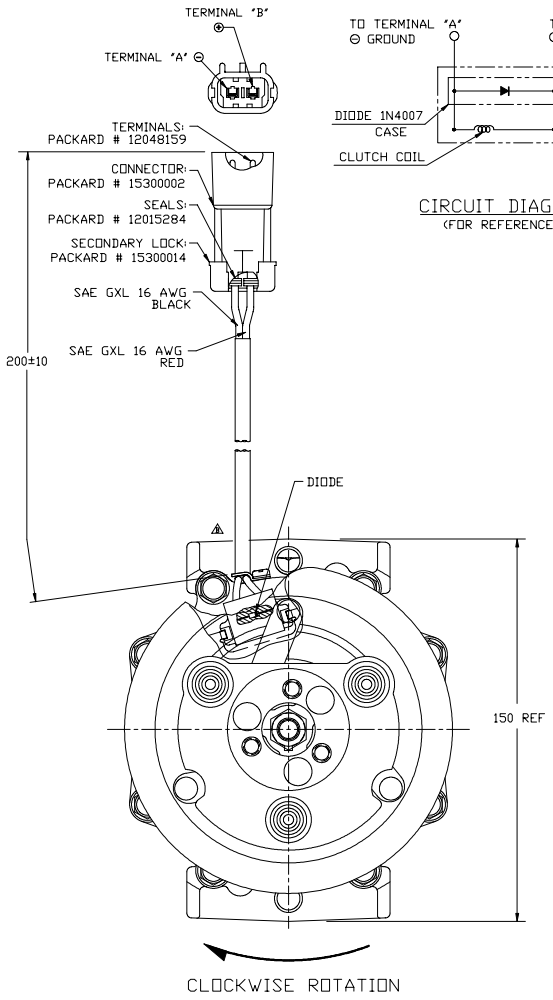

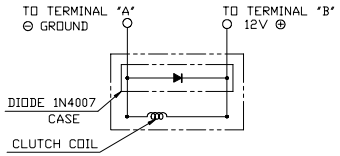

CIRCUIT DIAGRAM
(FOR REFERENCE)

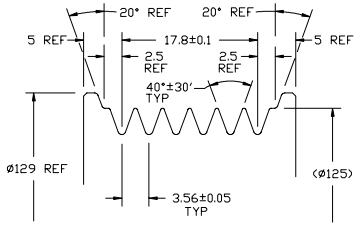

DETAIL B
SCALE: 3:1

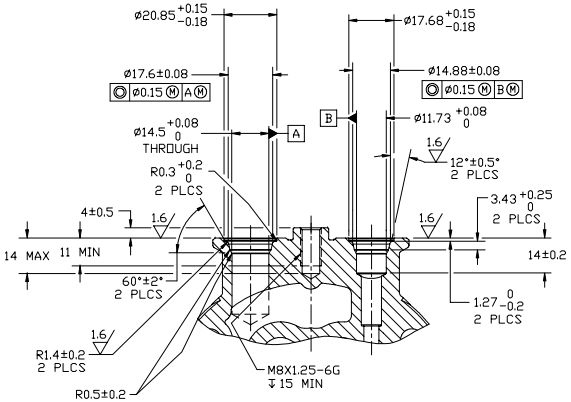

SECTION D-D
(BOLT AND SHIPPING PAD NOT SHOWN)

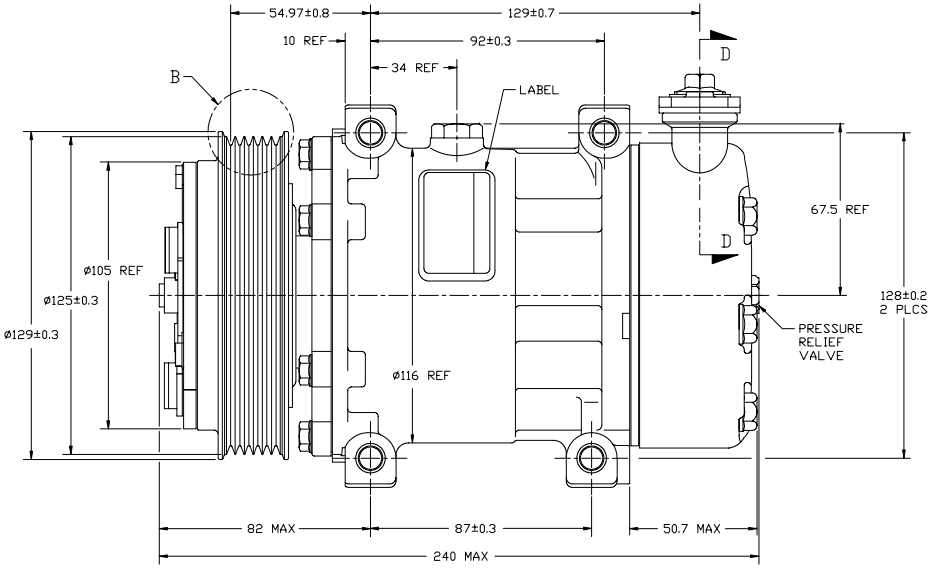

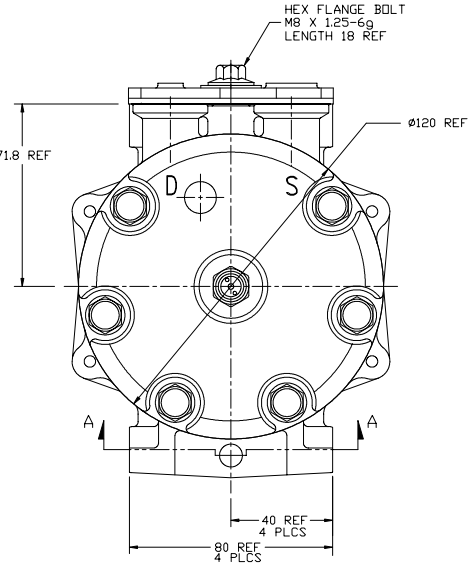

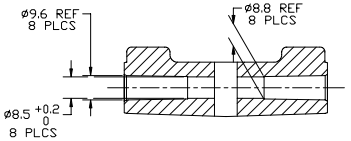

SECTION A-A

NOTE:
1. DIMENSIONS ARE TO VIRTUAL SHARP CORNERS UNLESS OTHERWISE SPECIFIED.

COMPRESSOR SPECIFICATIONS

DISPLACEMENT PER REVOLUTION	154.9 cc / rev. (9.5cu.in. / rev.)
MAXIMUM ALLOWABLE R.P.M.	8000 R.P.M.
MAXIMUM ALLOWABLE CONTINUOUS R.P.M.	6000 R.P.M.
REFRIGERANT	R134a
OIL (SP-15)	300 cc (10.1 fl.oz.)

CLUTCH SPECIFICATIONS

RATED VOLTAGE	DC 12V
BREAKAWAY TORQUE	3.5 kgf-m min. @ 12V
MINIMUM ENGAGEMENT VOLTAGE	7.5V @ AIR GAP 0.6mm REF
POWER CONSUMPTION	49 watts max.
BELT TYPE	PV6 TYPE
MAXIMUM ALLOWABLE BELT TENSION	90 kgf
PULLEY DIAMETER	ø125 mm (4.92 in.)
CLUTCH TYPE	HEAVY DUTY

DO NOT SCALE

REV. LEVEL		
A	RELEASED FOR: ENGG. DEVELOPMENT	
	DSGN.	M. Stallinger
	DWN	M. Stallinger
	CHK	Sam Lo 5/8/07
	APPV.	Ed Arnold
	APPV. DATE	5/8/07
A	RELEASED FOR: DESIGN VALIDATION	
	DSGN.	M. Stallinger
	APPV.	Ed Arnold
	APPV. DATE	5/8/07
A	RELEASED FOR: PRODUCTION VAL'D.	
	DSGN.	M. Stallinger
	APPV.	Ed Arnold
	APPV. DATE	5/8/07
A	RELEASED FOR: PRODUCTION	
	DSGN.	M. Stallinger
	APPV.	Ed Arnold
	APPV. DATE	5/8/07

SANDEN
SANDEN INTERNATIONAL (U.S.A.), INC.

DRAWN SCALE REF 1:1 | PLOTTED SCALE REF 1:1 | METRIC

This drawing and the information contained hereon are CONFIDENTIAL and PROPRIETARY to Sanden International (U.S.A.), Inc., are received in CONFIDENCE and shall not be used, copied, or disclosed to others without the written permission of Sanden International (U.S.A.), Inc.

INTERPRETATION OF THIS DRAWING PER ASME Y14.5M-1994

THIRD ANGLE PROJECTION | SIZE D

MATERIAL: -

NAME: COMPRESSOR

DWG. NO. 4039-6000 | REV B