PDCN	REV.	APPV DATE	REVISIONS	DWN	DSGN	CHK	APPV
	A		INITIAL RELEASE				
20080829	A	3/10/08	UPDATED TO SHOW LATEST CHANGES 4695-0452 REV A WAS 4695-0451 REV B	TG	JW	AA	EMA

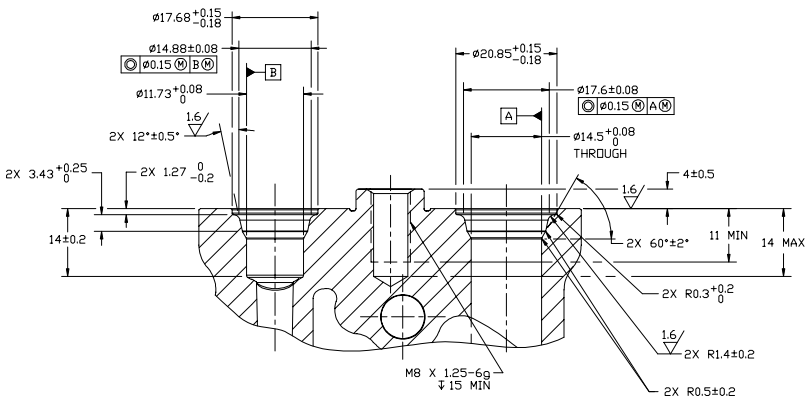

SECTION C-C
SCALE 2:1
(SHIPPING PAD AND BOLT REMOVED, SECTION ROTATED 90° CCW)

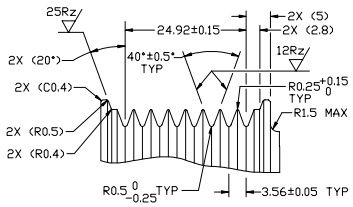

DETAIL B
SCALE 2:1

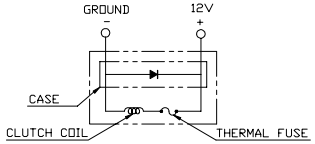

CIRCUIT DIAGRAM
(FOR REFERENCE)

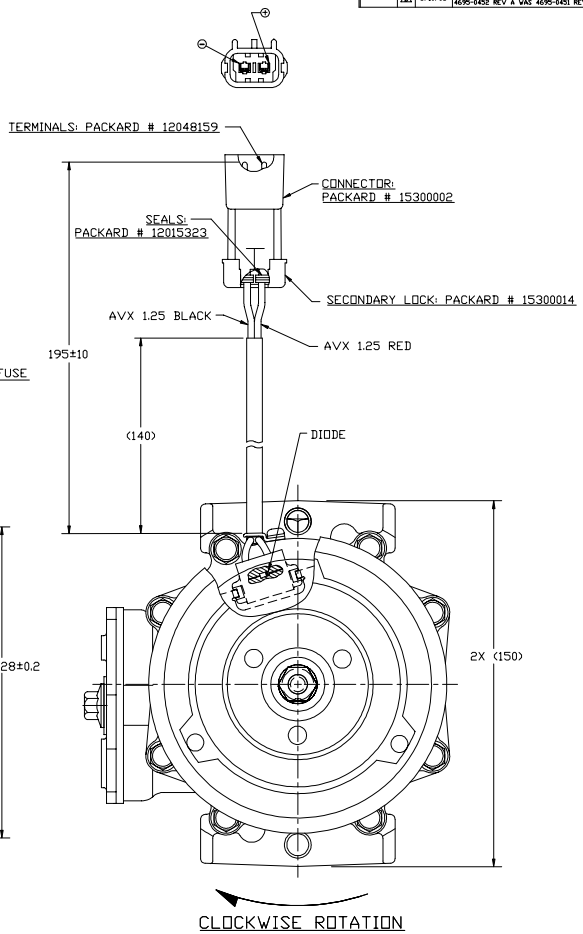

CLOCKWISE ROTATION

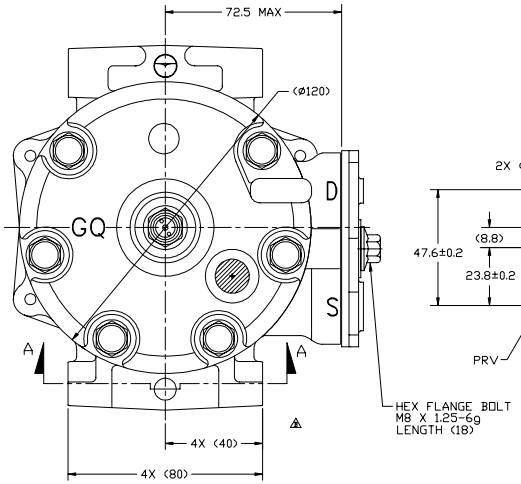

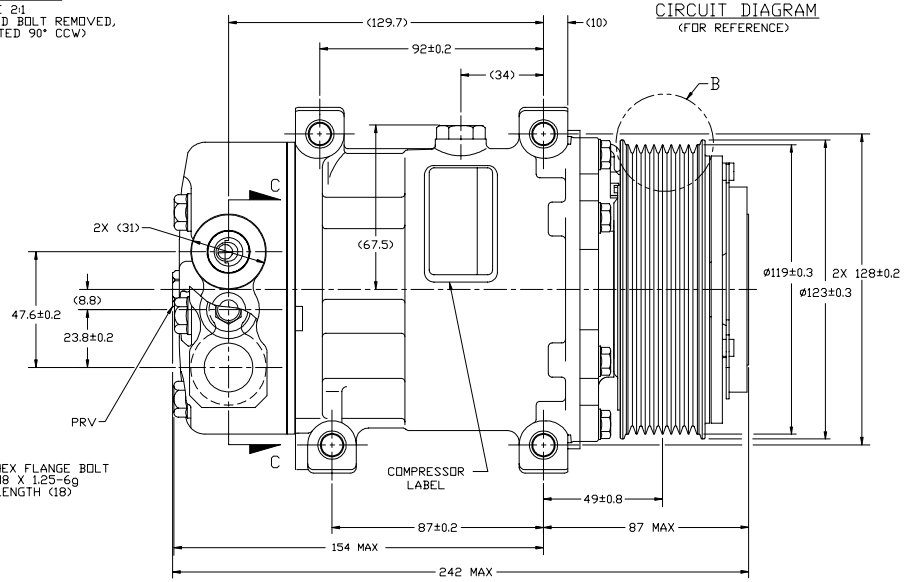

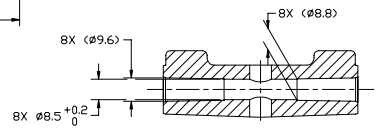

SECTION A-A

COMPRESSOR SPECIFICATIONS (REF)

DISPLACEMENT PER REVOLUTION	154 cc
MAXIMUM ALLOWABLE RPM	8000 RPM
MAXIMUM ALLOWABLE CONTINUOUS RPM	6000 RPM
REFRIGERANT	R134a
OIL (SP-15)	300 cc

CLUTCH SPECIFICATIONS (REF)

RATED VOLTAGE	12V
BREAKAWAY TORQUE	34 Nm
MINIMUM ENGAGEMENT VOLTAGE	7.5V
MAXIMUM POWER CONSUMPTION	49 W
BELT TYPE	PV8
MAXIMUM ALLOWABLE BELT TENSION	1177 N
PULLEY DIAMETER	ø119 mm
CLUTCH TYPE	SUPER HEAVY DUTY

DO NOT SCALE

REV. LEVEL		
A	RELEASED FOR ENG'G DEVELOPMENT	DSGN A. ARMENDARIZ; DWN A. ARMENDARIZ; CHK S. NAGARAJ; APPV. E. ARRIETA; APPV. DATE 12/15/08
A	RELEASED FOR DESIGN VALIDATION	DSGN A. ARMENDARIZ; APPV. E. ARRIETA; APPV. DATE 12/15/08
A	RELEASED FOR PRODUCTION VAL'D.	DSGN A. ARMENDARIZ; APPV. E. ARRIETA; APPV. DATE 12/15/08
A	RELEASED FOR PRODUCTION	DSGN A. ARMENDARIZ; APPV. E. ARRIETA; APPV. DATE 02/11/08

SANDEN
SANDEN INTERNATIONAL (U.S.A.), INC.

DRAWN SCALE REF 1:1 | PLOTTED SCALE REF NONE | METRIC

This drawing and the information contained hereon are CONFIDENTIAL and PROPRIETARY to Sanden International (U.S.A.), Inc., are received in CONFIDENCE and shall not be used, copied, or disclosed to others without the written permission of Sanden International (U.S.A.), Inc.

INTERPRETATION OF THIS DRAWING PER ASME Y14.5M-1994
THIRD ANGLE PROJECTION
SIZE D

MATERIAL:

NAME: COMPRESSOR

DWG. NO. 4077-6000 REV. B