PBCN	REV.	APPV DATE	REVISIONS	DWN	DSGN	CHK	APPV
	A		INITIAL ISSUE REF. 4377-6000 REV. C				

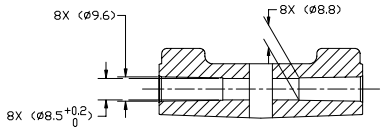

SECTION A-A

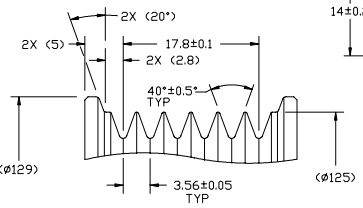

DETAIL B
SCALE 3:1

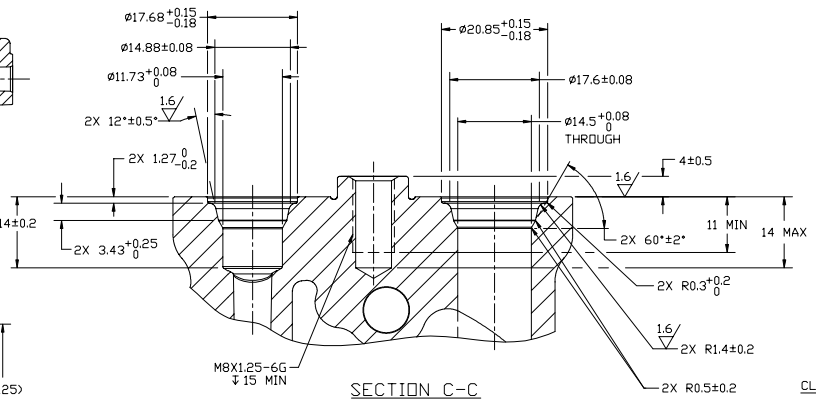

SECTION C-C
SCALE 2:1
(SHIPPING PAD AND BOLT REMOVED, SECTION ROTATED 90° CCW)

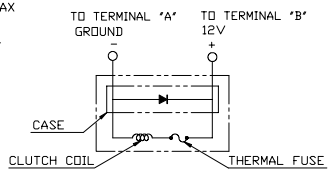

CIRCUIT DIAGRAM
(FOR REFERENCE)

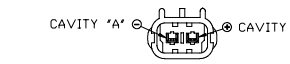

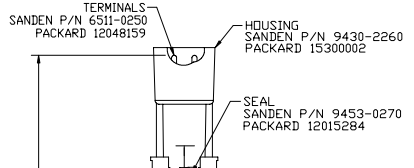

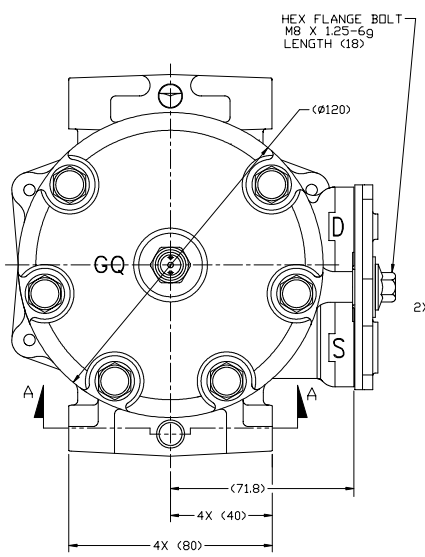

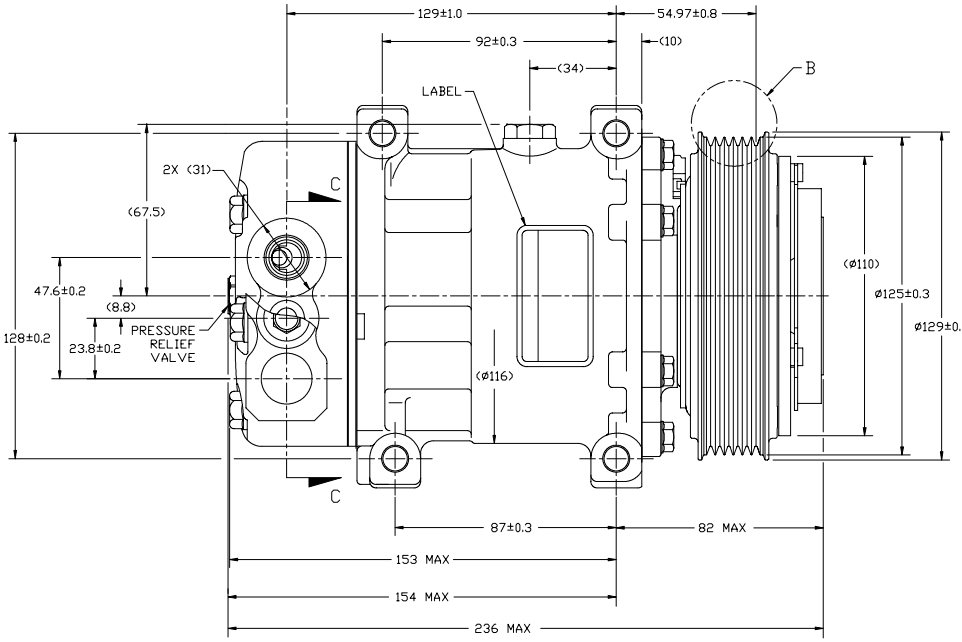

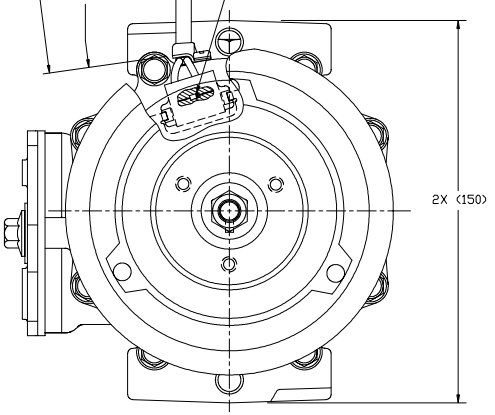

CLOCKWISE ROTATION

COMPRESSOR SPECIFICATIONS REF.

DISPLACEMENT PER REVOLUTION	154.9 cc / rev. (9.5cu.in. / rev.)
MAXIMUM ALLOWABLE R.P.M.	6000 R.P.M.
MAXIMUM ALLOWABLE CONTINUOUS R.P.M.	4000 R.P.M.
REFRIGERANT	R134a
OIL (SP-15)	300 cc (10.1 fl.oz.)

CLUTCH SPECIFICATIONS REF.

RATED VOLTAGE	DC 12V
BREAKAWAY TORQUE	3.5 kgf-m min. @ 12V
MINIMUM ENGAGEMENT VOLTAGE	7.5V @ AIR GAP 0.6mm
POWER CONSUMPTION	49 watts max.
BELT TYPE	PV6 TYPE
MAXIMUM ALLOWABLE BELT TENSION	120 kgf
PULLEY DIAMETER	Ø125 mm (4.92 in.)
CLUTCH TYPE	HEAVY DUTY

NOTE:
1. DIMENSIONS ARE TO VIRTUAL SHARP CORNERS UNLESS OTHERWISE SPECIFIED.
2. COMPRESSOR TO BE CHARGED WITH NITROGEN PRIOR TO SHIPPING WITHIN 0.2 TO 1.6 kg/cm².

DO NOT SCALE

REV. LEVEL	RELEASED FOR:	
A	ENGG. DEVELOPMENT	
	DSGN	Teresa Gorski
	DWN	Teresa Gorski
	CHK	M.Balthazar
	APPV.	E.M.Arrieta
	APPV. DATE	1/4/08
A	RELEASED FOR: DESIGN VALIDATION	
	DSGN	Teresa Gorski
	APPV.	E.M.Arrieta
	APPV. DATE	1/4/08
A	RELEASED FOR: PRODUCTION VAL'D.	
	DSGN	Teresa Gorski
	APPV.	E.M.Arrieta
	APPV. DATE	1/4/08
A	RELEASED FOR: PRODUCTION	
	DSGN	Teresa Gorski
	APPV.	E.M.Arrieta
	APPV. DATE	1/23/08

SANDEN
SANDEN INTERNATIONAL (U.S.A.), INC.

DRAWN SCALE REF 1:1 | PLOTTED SCALE REF NONE | METRIC

This drawing and the information contained hereon are CONFIDENTIAL and PROPRIETARY to Sanden International (U.S.A.), Inc., are received in CONFIDENCE and shall not be used, copied, or disclosed to others without the written permission of Sanden International (U.S.A.), Inc.

INTERPRETATION OF THIS DRAWING PER ASME Y14.5M-1994

THIRD ANGLE PROJECTION | SIZE D

MATERIAL:

NAME: COMPRESSOR

DWG. NO. 4080-6000 | REV A