PDCN	REV.	APPV DATE	REVISIONS	DWN	DSGN	CHK	APPV
	A		INITIAL ISSUE REF DRAWING 4383-6000 REV. C				
2008019	A	3/10/08	UPDATED TO SHOW LATEST CHANGES 4695-0452 REV A WAS 4695-0451 REV B	TG	JW	AA	EMA

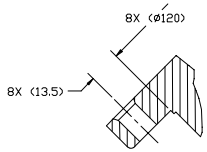

SECTION A-A

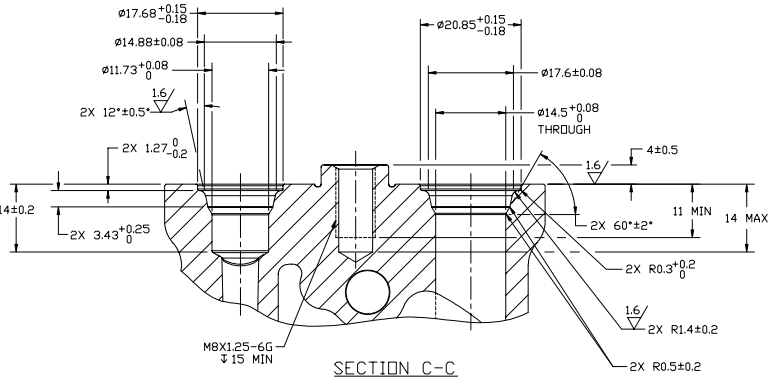

SECTION C-C
SCALE 2:1
(SHIPPING PAD AND BOLT REMOVED, SECTION ROTATED 90° CCW)

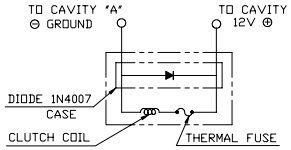

CIRCUIT DIAGRAM

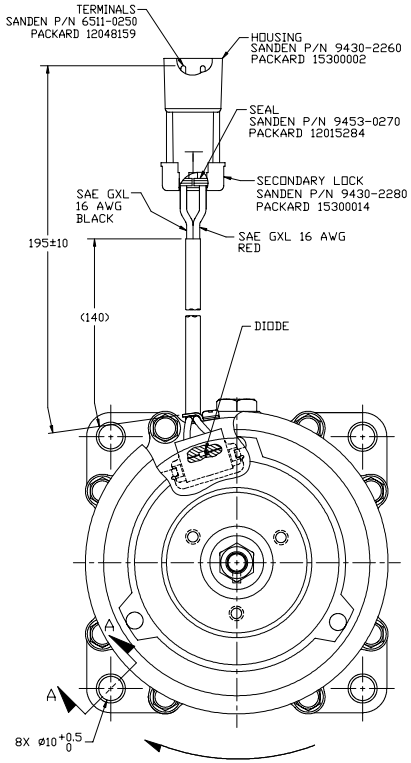

CLOCKWISE ROTATION

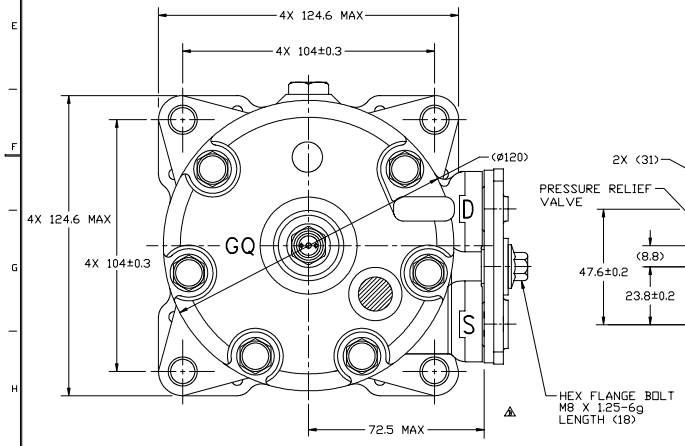

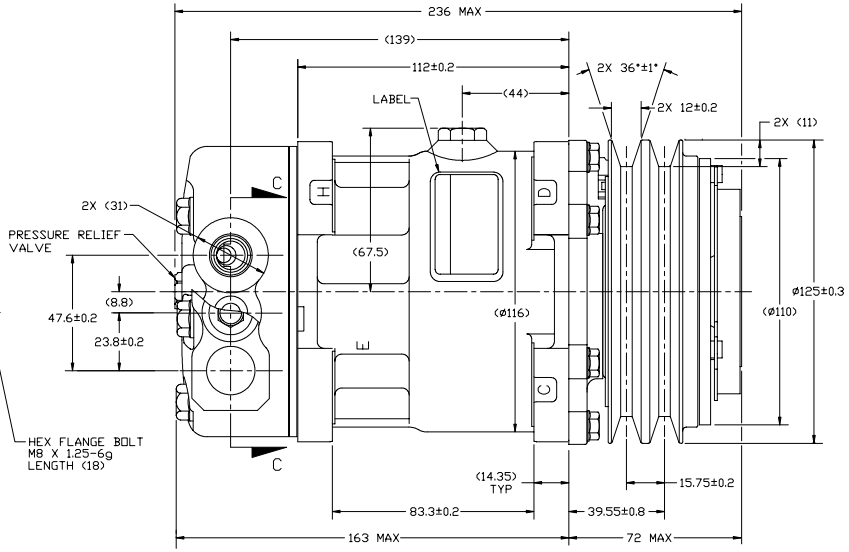

COMPRESSOR SPECIFICATIONS REF.

DISPLACEMENT PER REVOLUTION	154.9 cc / rev. (9.5 in.³ / rev.)
MAXIMUM ALLOWABLE R.P.M.	8000 R.P.M.
MAXIMUM ALLOWABLE CONTINUOUS R.P.M.	6000 R.P.M.
REFRIGERANT	R134a
OIL (SP-15)	300 cc (10.1 fl. oz.)
CUSTOMER PART NUMBER	F69-6003-231

CLUTCH SPECIFICATIONS REF.

RATED VOLTAGE	DC 12V
BREAKAWAY TORQUE	3.5 kgf-m MIN. @ 12V
MINIMUM ENGAGEMENT VOLTAGE	7.5V @ AIR GAP 0.6mm
POWER CONSUMPTION	49 WATTS MAX.
BELT TYPE	A TYPE
MAXIMUM ALLOWABLE BELT TENSION	60 kgf PER BELT
PULLEY DIAMETER	Ø125mm (4.9 in.)
CLUTCH TYPE	HEAVY DUTY

NOTE:
1. DIMENSIONS ARE TO VIRTUAL SHARP CORNERS UNLESS OTHERWISE SPECIFIED.
2. COMPRESSOR TO BE CHARGED WITH NITROGEN PRIOR TO SHIPPING WITHIN 0.2 TO 1.6 kg/cm².

DO NOT SCALE

REV. LEVEL		
A	RELEASED FOR ENGI. DEVELOPMENT	DSGN Teresa Gorski; DWN Teresa Gorski; CHK M.Balthazar; APPV. E.M.Arrieta; APPV. DATE 1/4/08
A	RELEASED FOR DESIGN VALIDATION	DSGN Teresa Gorski; APPV. E.M.Arrieta; APPV. DATE 1/4/08
A	RELEASED FOR PRODUCTION VAL'D.	DSGN Teresa Gorski; APPV. E.M.Arrieta; APPV. DATE 1/4/08
A	RELEASED FOR PRODUCTION	DSGN Teresa Gorski; APPV. E.M.Arrieta; APPV. DATE 1/23/08

SANDEN
SANDEN INTERNATIONAL (U.S.A.), INC.

DRAWN SCALE REF 1:1 | PLOTTED SCALE REF NONE | METRIC

This drawing and the information contained hereon are CONFIDENTIAL and PROPRIETARY to Sanden International (U.S.A.), Inc., are received in CONFIDENCE and shall not be used, copied, or disclosed to others without the written permission of Sanden International (U.S.A.), Inc.

INTERPRETATION OF THIS DRAWING PER ASME Y14.5M-1994

THIRD ANGLE PROJECTION

SIZE D

MATERIAL:

NAME COMPRESSOR

DWG. NO. 4089-6000 REV. B