PDCN	REV.	APPV DATE	REVISIONS	DWN	DSGN	CHK	APPV
	A		INITIAL ISSUE REF DRAWING NO 4408-6000 REV B				

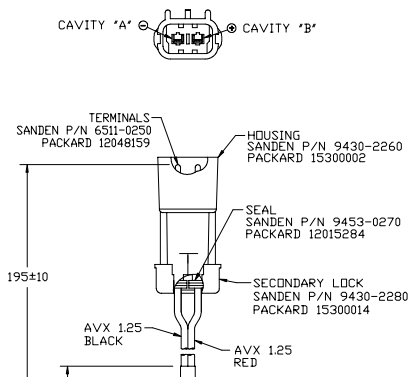

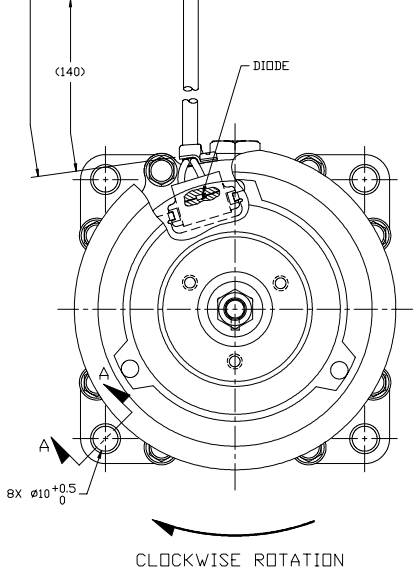

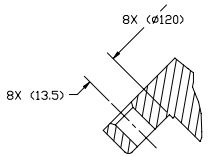

SECTION A-A

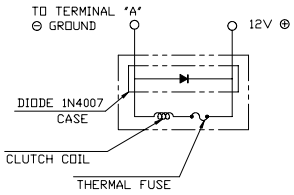

CIRCUIT DIAGRAM

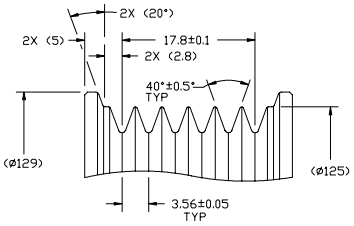

DETAIL B
SCALE 3:1

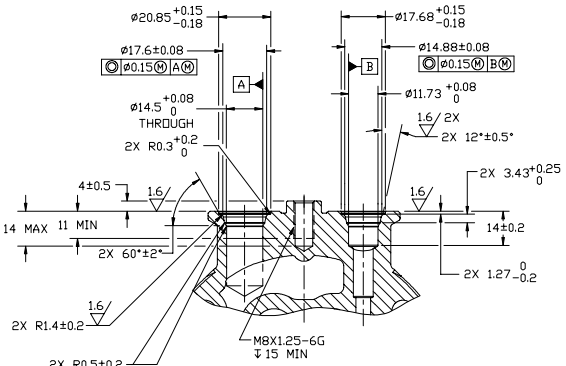

SECTION D-D
(BOLT AND SHIPPING PAD NOT SHOWN)

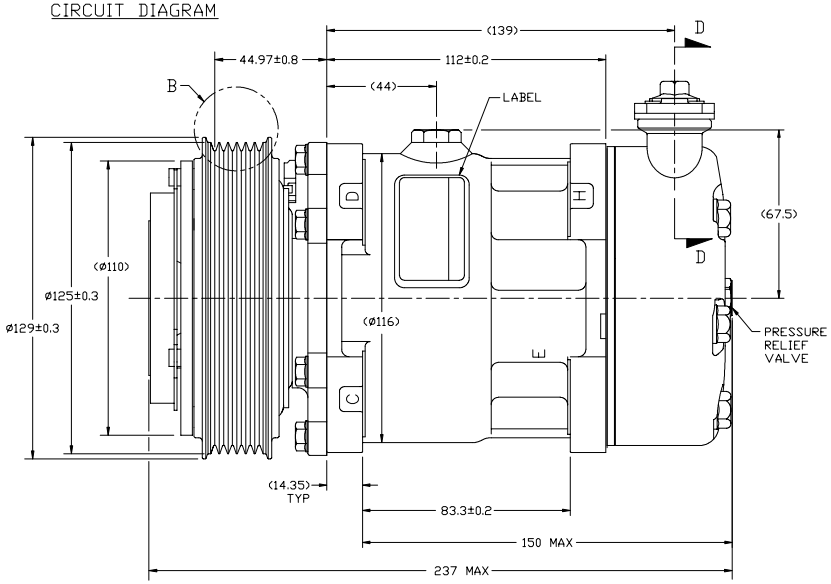

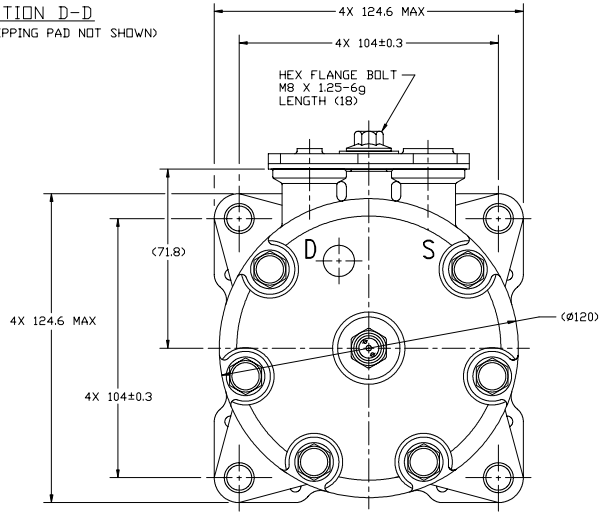

COMPRESSOR SPECIFICATIONS (REF)

DISPLACEMENT PER REVOLUTION	154.9 cc / rev. (9.5cu.in. / rev.)
MAXIMUM ALLOWABLE R.P.M.	8000 R.P.M.
MAXIMUM ALLOWABLE CONTINUOUS R.P.M.	6000 R.P.M.
REFRIGERANT	R134a
OIL (SP-15)	300 cc (10.1 fl.oz.)

CLUTCH SPECIFICATIONS (REF)

RATED VOLTAGE	DC 12V
BREAKAWAY TORQUE	3.5 kgf-m min. @ 12V
MINIMUM ENGAGEMENT VOLTAGE	7.5V @ AIR GAP 0.6mm
POWER CONSUMPTION	49 watts max.
BELT TYPE	PV6 TYPE
MAXIMUM ALLOWABLE BELT TENSION	120 kgf
PULLEY DIAMETER	Ø125 mm (4.92 in.)
CLUTCH TYPE	HEAVY DUTY

NOTE:
1. DIMENSIONS ARE TO VIRTUAL SHARP CORNERS UNLESS OTHERWISE SPECIFIED.
2. COMPRESSOR TO BE CHARGED WITH NITROGEN PRIOR TO SHIPPING WITHIN 0.2 TO 1.6 kg/cm².

DO NOT SCALE

REV. LEVEL		
A	RELEASED FOR ENG'G DEVELOPMENT	DSGN Teresa Gorski
		DWN Teresa Gorski
		CHK M.Balthazar
		APPV. E.M.Arrieta
		APPV. DATE 1/4/08
A	RELEASED FOR DESIGN VALIDATION	DSGN Teresa Gorski
		APPV. E.M.Arrieta
		APPV. DATE 1/4/08
A	RELEASED FOR PRODUCTION VAL'D	DSGN Teresa Gorski
		APPV. E.M.Arrieta
		APPV. DATE 1/4/08
A	RELEASED FOR PRODUCTION	DSGN Teresa Gorski
		APPV. E.M.Arrieta
		APPV. DATE 1/23/08

SANDEN
SANDEN INTERNATIONAL (U.S.A.), INC.

DRAWN SCALE REF 1:1 | PLOTTED SCALE REF NONE | METRIC

This drawing and the information contained hereon are CONFIDENTIAL and PROPRIETARY to Sanden International (U.S.A.), Inc., are received in CONFIDENCE and shall not be used, copied, or disclosed to others without the written permission of Sanden International (U.S.A.), Inc.

INTERPRETATION OF THIS DRAWING PER ASME Y14.5M-1994

THIRD ANGLE PROJECTION | SIZE D

MATERIAL:

NAME: COMPRESSOR

DWG. NO. 4091-6000 | REV A