PDCN	REV	APPV DATE	REVISIONS	DWN	DSGN	CHK	APPV
	A		INITIAL ISSUE				

PARTIAL SECT. A-A

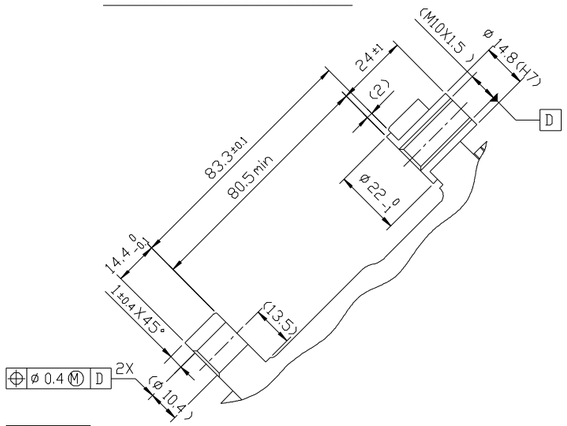

PARTIAL SECT. D-D

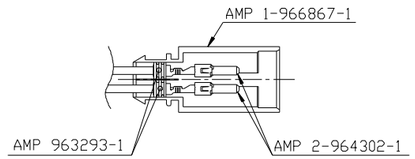

DETAIL OF GROOVE (2:1)

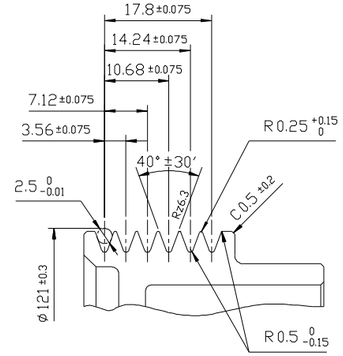

PARTIAL SECT. B-B

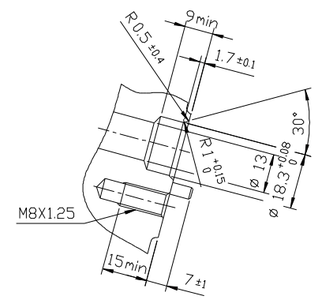

PARTIAL SECT. C-C

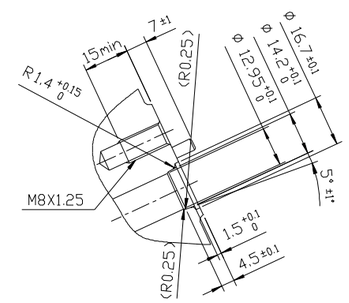

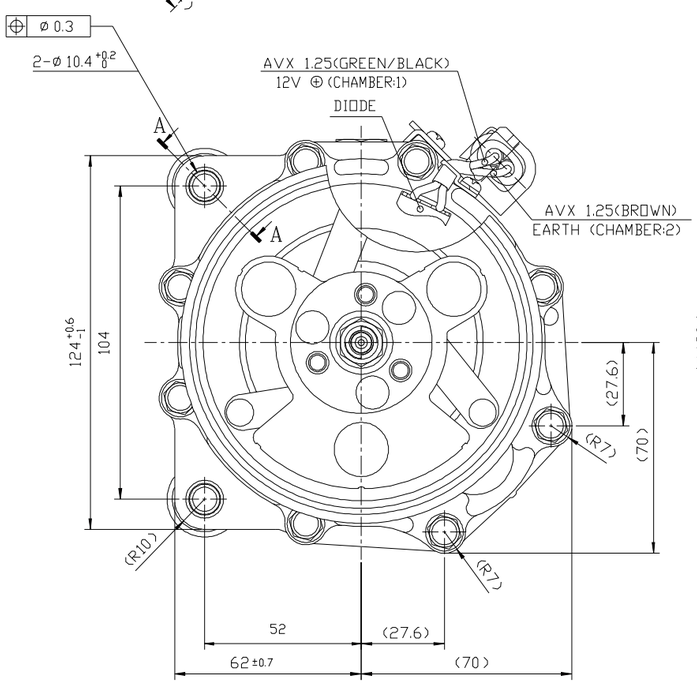

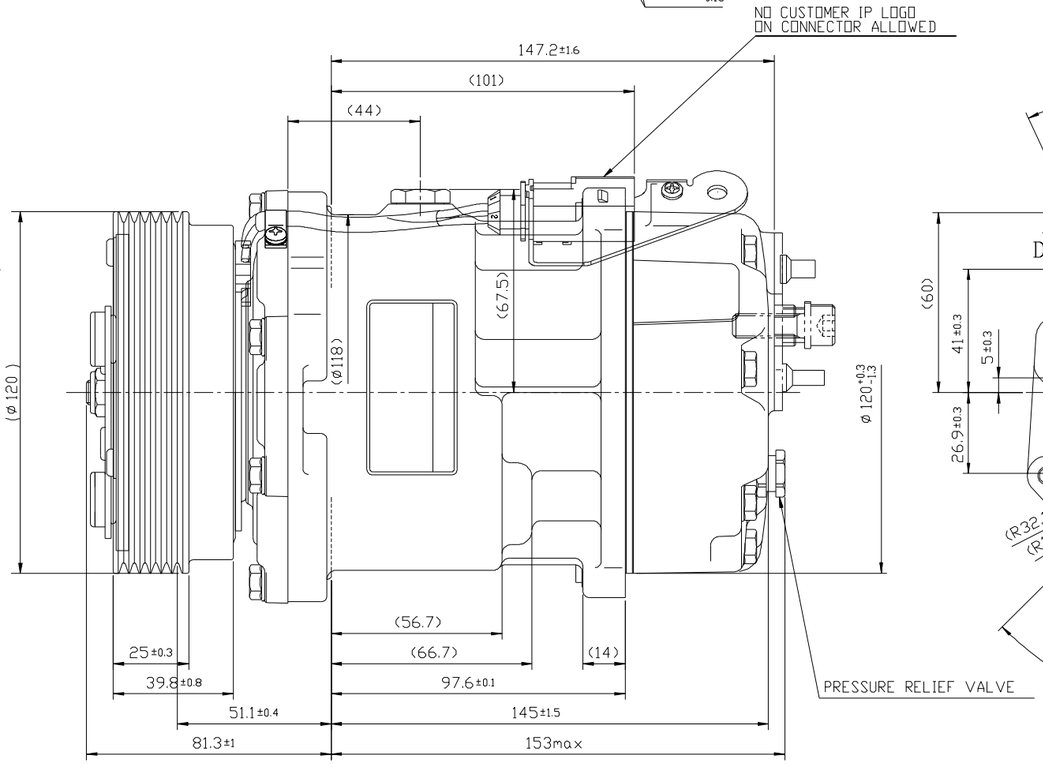

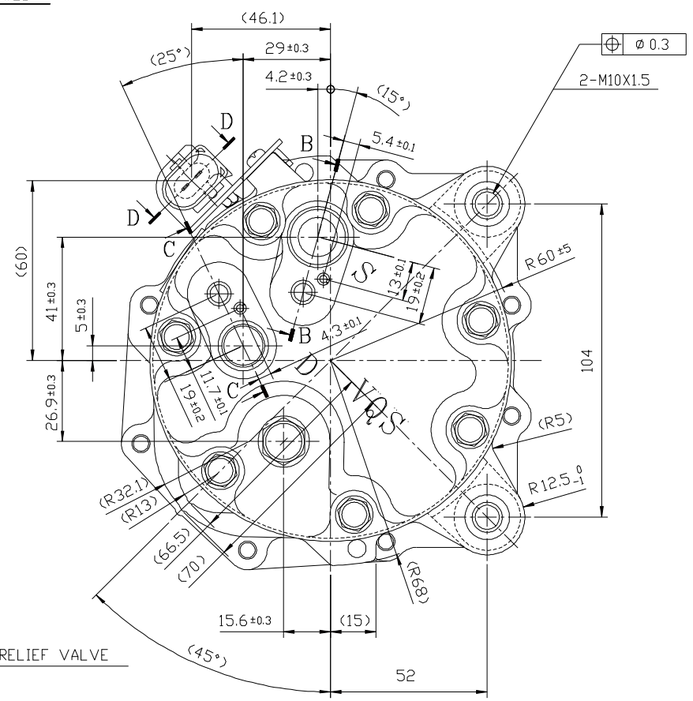

COMPRESSOR SPECIFICATIONS

BORE	ø 29.3 mm
MAXIMUM STROKE	34.2 mm
MINIMUM STROKE	1.7 mm
NUMBER OF CYLINDER	7
MAXIMUM DISPLACEMENT PER REVOLUTION	161.3 cm^3/rev.
MINIMUM DISPLACEMENT PER REVOLUTION	8.1 cm^3/rev.
MAXIMUM ALLOWABLE CONTINUOUS SPEED	8000 r.p.m.
MAXIMUM DOWNSHIFT SPEED	8500 r.p.m.
REFRIGERANT	R-134a
OIL	SP-10 OR EQUIVALENT
OIL CHARGE	135 cm^3
ROTATION (CLUTCH SIDE VIEW)	CLOCKWISE COUNTER CLOCKWISE
WEIGHT	4.2 kg

CLUTCH SPECIFICATIONS

RATED VOLTAGE	DC 12 V
MINIMUM BREAKAWAY TORQUE	42.1 Nm
MINIMUM ENGAGEMENT VOLTAGE	DC 7.5 V
MAXIMUM POWER CONSUMPTION	43 W
MAXIMUM ALLOWABLE CONTINUOUS SPEED	8000 r.p.m.
MAXIMUM DOWNSHIFT SPEED	8500 r.p.m.
BELT TYPE	PV TYPE
PULLEY DIAMETER	ø 120 mm
WEIGHT	2.3 kg
THERMAL FUSE CUT OFF TEMPERATURE	182 ±5 °C

COMPRESSOR MOUNTING ANGLE (1:2)

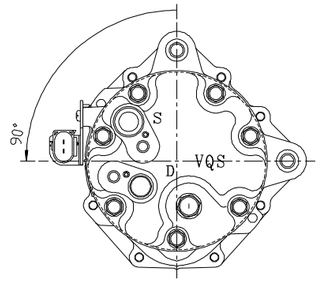

REV LEVEL		
A	RELEASED FOR ENG. DEVELOPMENT	DSGN A. ARMENDARIZ; DWN A. ARMENDARIZ; CHK S. NAGARAJ; APPV. R. MARTINEZ; APPV DATE 06/25/08
A	RELEASED FOR DESIGN VALIDATION	DSGN A. ARMENDARIZ; APPV. R. MARTINEZ; APPV. DATE 06/25/08
A	RELEASED FOR PROD VALIDATION	DSGN A. ARMENDARIZ; APPV. R. MARTINEZ; APPV. DATE 06/25/08
A	RELEASED FOR PRODUCTION	DSGN A. ARMENDARIZ; APPV. R. MARTINEZ; APPV DATE 02/05/09

SANDEN

METRIC — DIMENSIONS SHOWN IN MILLIMETERS UNLESS OTHERWISE SPECIFIED.

THE INFORMATION CONTAINED IN THIS DRAWING IS THE SOLE PROPERTY OF SANDEN INTERNATIONAL. ANY REPRODUCTION IN PART OR AS A WHOLE WITHOUT THE WRITTEN PERMISSION OF SANDEN INTERNATIONAL INC IS PROHIBITED.

INTERPRETATION OF THIS DRAWING PER ASME Y14.5M-1994

THIRD ANGLE PROJECTION

SIZE D

MATERIAL

NAME: COMPRESSOR

DWG NO: 4256-6000 REV A