PROD	REV.	APPV DATE	REVISIONS	DWN	DSGN	CHK	APPV
	A		INITIAL RELEASE				

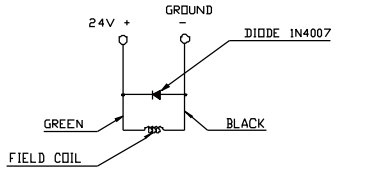

CIRCUIT DIAGRAM

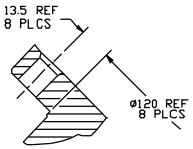

SECTION A-A

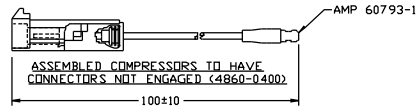

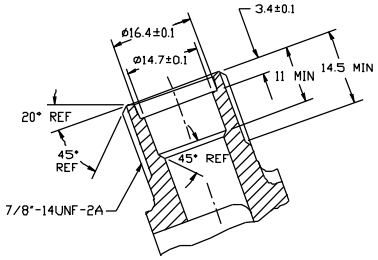

SECTION C-C

SCALE: 2:1
(SECTION SHOWN WITH
SEAL CAP REMOVED)

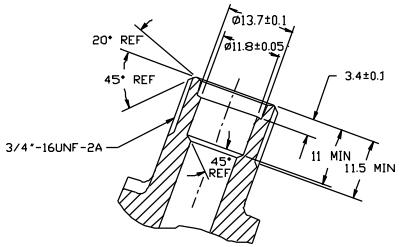

SECTION D-D

SCALE: 2:1
(SECTION SHOWN WITH
SEAL CAP REMOVED)

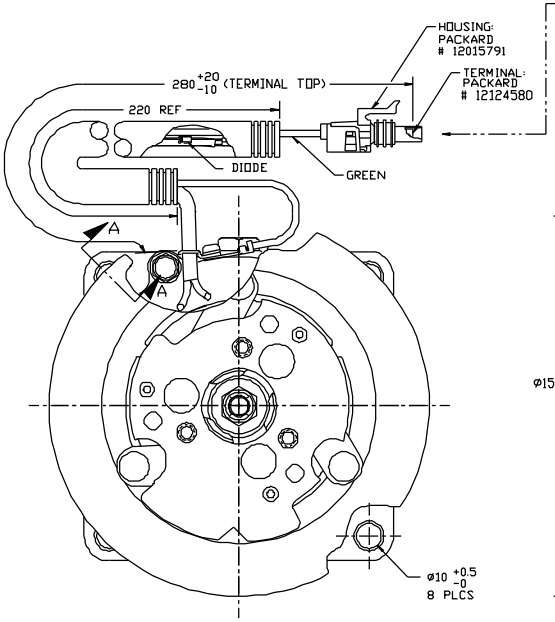

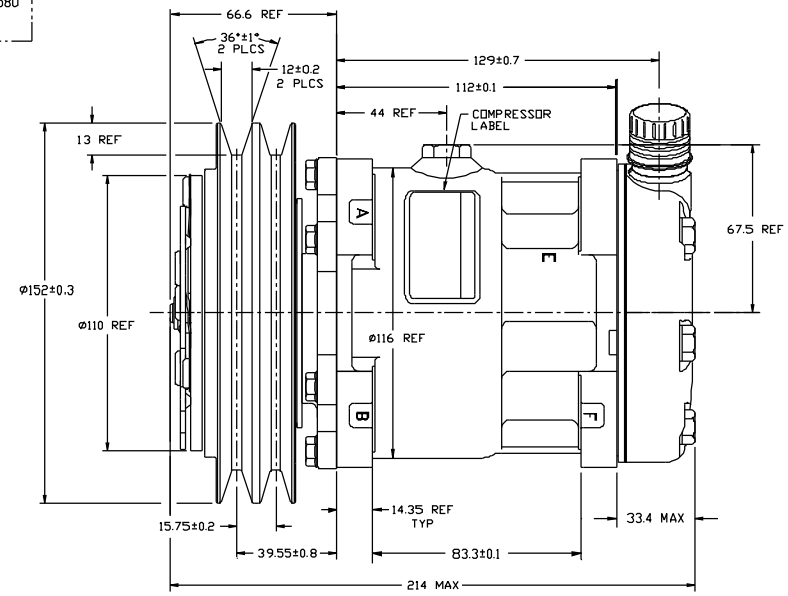

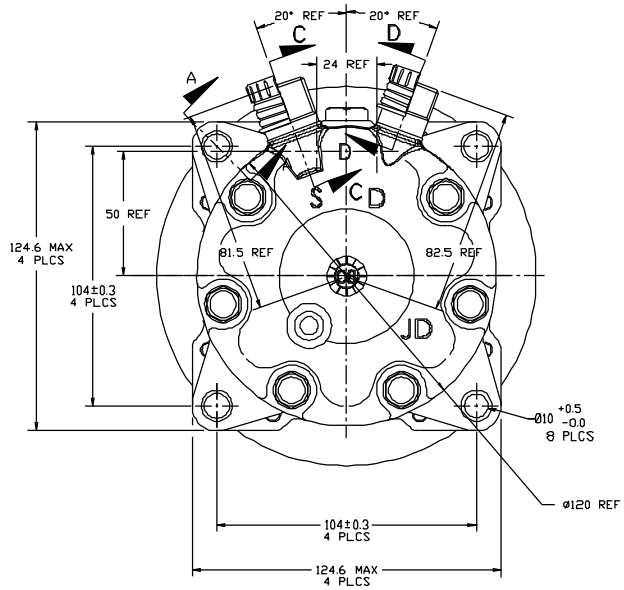

COMPRESSOR SPECIFICATIONS (REF)

DISPLACEMENT PER REVOLUTION	154.9 cc / rev. (9.5cu.in. / rev.)
MAXIMUM ALLOWABLE SPEED	7000 R.P.M.
MAXIMUM ALLOWABLE CONTINUOUS SPEED	6000 R.P.M.
REFRIGERANT	R134a
OIL (SP-15)	210 cc (7.1 fl.oz.)
WEIGHT	TBD

CLUTCH SPECIFICATIONS (REF)

RATED VOLTAGE	DC 24V
BREAKAWAY TORQUE	3.5 kgf-m min. @ 24V
MINIMUM ENGAGEMENT VOLTAGE	16V @ AIR GAP 0.6mm
POWER CONSUMPTION	34 watts max.
BELT TYPE	A TYPE
MAXIMUM ALLOWABLE BELT TENSION	60 kgf per belt
PULLEY DIAMETER	ø152 mm (5.98 in.)
CLUTCH TYPE	HEAVY DUTY

DO NOT SCALE

REV. LEVEL	RELEASED FOR:	
A	PRODUCT DEVELOPMENT	DSGN Teresa Gorski; DWN Teresa Gorski; CHK Shripa Nagaraj; APPV Rene Martinez; APPV. DATE 6/1/09
A	DESIGN VALIDATION	DSGN Teresa Gorski; APPV Rene Martinez; APPV. DATE 6/1/09
A	PRODUCTION VAL'N	DSGN Teresa Gorski; APPV Rene Martinez; APPV. DATE 6/1/09
A	PRODUCTION	DSGN Teresa Gorski; APPV Rene Martinez; APPV. DATE 6/9/09

SANDEN

SANDEN INTERNATIONAL (U.S.A.), INC.

DRAWN SCALE REF 1:1 | PLOTTED SCALE REF 1:1 | METRIC

This drawing and the information contained herein are CONFIDENTIAL and PROPRIETARY to Sanden International (U.S.A.), Inc., are received in CONFIDENCE and shall not be used, copied, or disclosed to others without the written permission of Sanden International (U.S.A.), Inc.

INTERPRETATION OF THIS DRAWING PER ASME Y14.5M-1994

THIRD ANGLE PROJECTION

SIZE D

MATERIAL:

NAME: COMPRESSOR

DWG. NO. 4297-6000 REV A