PDCN	REV.	APPV DATE	REVISIONS	DWN	DSGN	CHK	APPV
	A		INITIAL ISSUE REF. DRV 4842-6000 REV. F				
2005089	B	6/1/05	160±10 cc (5.4 fl. oz.) WAS 210±10 cc (10.15 fl. oz.). ARMATURE 6736-6030 (1B5), WAS 6732-6030 (1BN0. 47.3±0.8 WAS 47.3±0.5.	JS	KS	DRL	NB
2005191c	C	07/13/05	ADDED 'REF'' TO BOTH CHART TITLES 210 cc (7.1 fl. oz.) WAS 160 cc (5.4 fl. oz.) REMOVED PART NUMBER CALL OUT FROM TERMINAL, CONNECTOR AND HEX FLANGE SCREW CALLOUT REMOVED 'REF' FROM 72V MIN @ 0.6mm GAP' REMOVED 'REF' FROM 7.5 kg (16.5 lb.) REMOVED 'REF' FROM 49 WATTS MAX ARMATURE 6732-6030 (1BN0 WAS 6736-6030 (1B5)	RSR	JW	DRL	NB
2006310	D	12/11/06	PRV 4307-6470 WAS 4967-6470 PRV OPENING PRESSURE RANGE WAS 508-595 PSIG (35.7-41.8 kg/cm²G)	JS	JW	DRL	TK

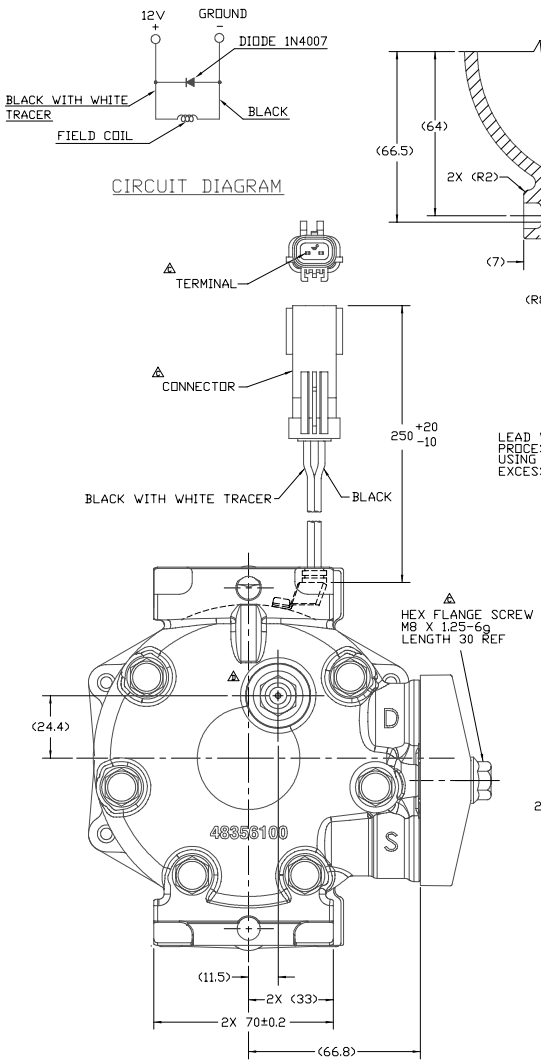

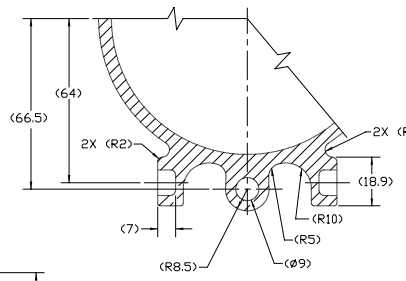

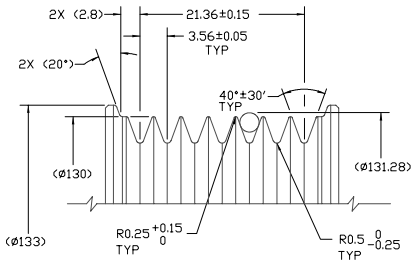

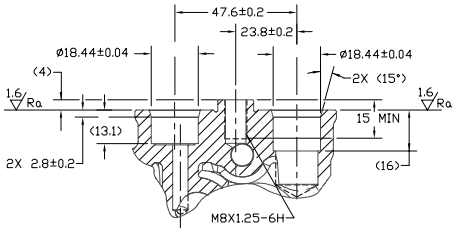

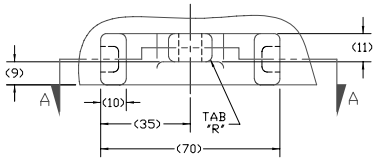

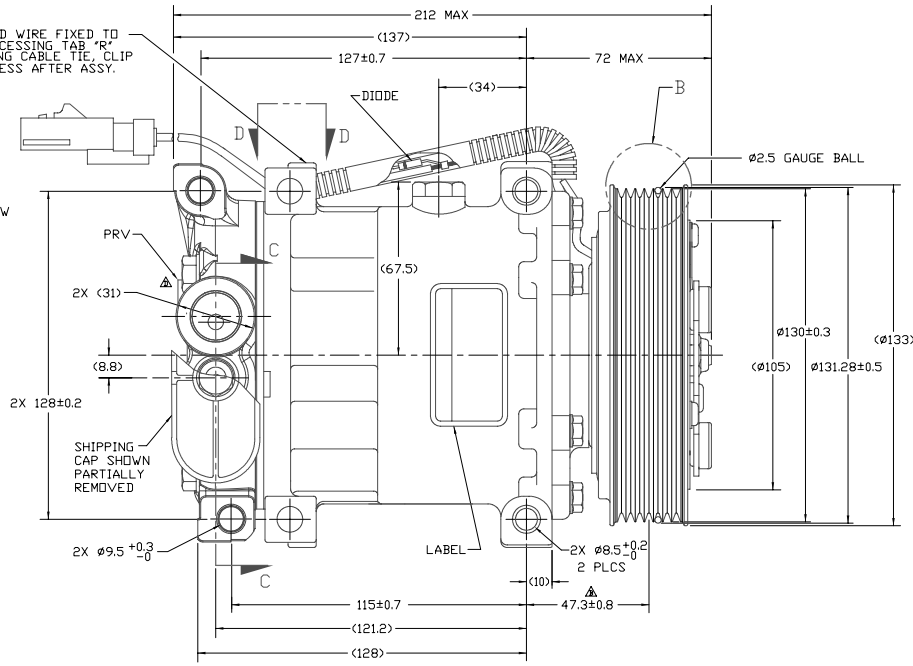

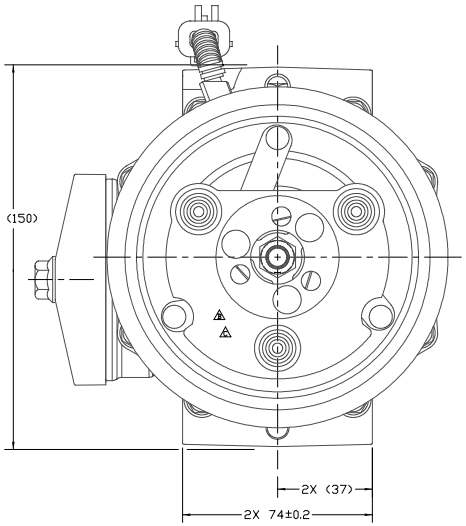

COMPRESSOR SPECIFICATIONS (REF)

DISPLACEMENT PER REVOLUTION	154.9 cc / rev. (9.5 cu.in. / rev.)
MAXIMUM ALLOWABLE R.P.M.	8000 r.p.m.
MAXIMUM ALLOWABLE CONTINUOUS R.P.M.	6000 r.p.m.
REFRIGERANT	R134a
OIL (SP-15)	210±10 cc (7.1 fl.oz.)
WEIGHT	7.5 kg (16.5 lb.)
PRV OPENING PRESSURE RANGE	508-594 PSIG (3.5 MPa ~ 4.1 MPa)

CLUTCH SPECIFICATIONS (REF)

RATED VOLTAGE	DC 12V
BREAKAWAY TORQUE	3.5 kgf-m MIN @ 12V
MINIMUM ENGAGEMENT VOLTAGE	7.5V max @ AIR GAP 0.6mm
POWER CONSUMPTION	49 WATTS MAX
BELT TYPE	PV7
MAXIMUM ALLOWABLE BELT TENSION	120 kgf
PULLEY DIAMETER	(ø130)
CLUTCH TYPE	STANDARD

NOTES:

1. COMPRESSOR/CLUTCH MUST CONFORM TO THE REQUIREMENTS OF SANDEN STANDARDS SES-214 REV. B AND SIA-ES-2002 REV. B.
2. NITROGEN HOLDING CHARGE DELETED.

DO NOT SCALE

REV. LEVEL	RELEASED FOR: ENGG DEVELOPMENT
A	DSGN: Kyle V Senkers 3/28/05; DWN: J Sokolowski; CHK: H. Dennis Lee 3/28/05; APPV: Robert Garver; APPV. DATE: 4/1/05
REV. LEVEL	RELEASED FOR: DESIGN VALIDATION
C	DSGN: Jamey Waldrop; APPV.: NB; APPV. DATE: 07/13/05
REV. LEVEL	RELEASED FOR: PRODUCTION VAL'D.
C	DSGN: Jamey Waldrop; APPV.: NB; APPV. DATE: 07/13/05
REV. LEVEL	RELEASED FOR: PRODUCTION
C	DSGN: Jamey Waldrop; APPV.: NB; APPV. DATE: 07/13/05

SANDEN

SANDEN INTERNATIONAL (U.S.A.), INC.

DRAWN SCALE REF 1:1 | PLOTTED SCALE REF 1:1 | METRIC

This drawing and the information contained hereon are CONFIDENTIAL and PROPRIETARY to Sanden international (U.S.A.), Inc., are received in CONFIDENCE and shall not be used, copied, or disclosed to others without the written permission of Sanden International (U.S.A.), Inc.

INTERPRETATION OF THIS DRAWING PER ASME Y14.5M-1994

THIRD ANGLE PROJECTION | SIZE D

MATERIAL:

NAME: COMPRESSOR

DWG. NO. 4331-6000 | REV. D