PDCN. NO.	REV.	APPV DATE	REVISIONS	DWN	DSGN	CHK	APPV
	A		INITIAL ISSUE. REF: DWG. NO. 4835-6000 REV. F				
2006310	B	11/20/06	PRV 4307-6470 WAS 4967-6470	DRL	RM	DRL	RM

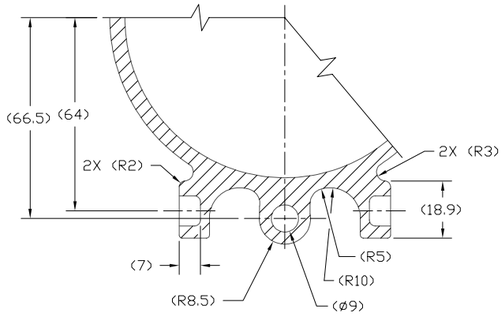

SECTION A-A

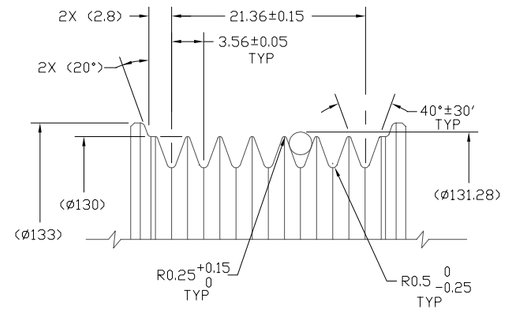

DETAIL C
SCALE 3:1

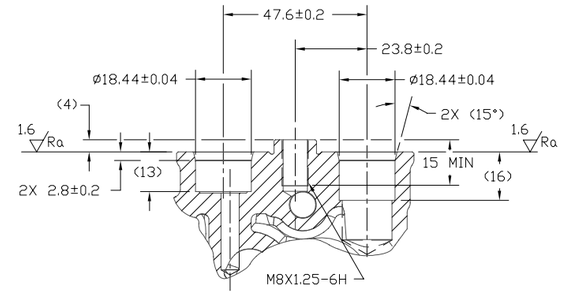

SECTION D-D
(SHIPPING PAD ASSEMBLY AND BOLT REMOVED, SECTION ROTATED 90°)

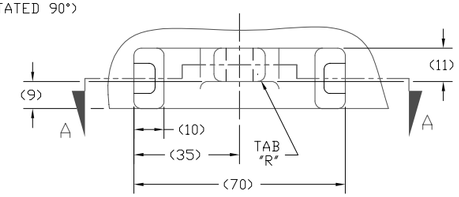

VIEW E-E
LEAD WIRE REMOVED
TYP 2 PLCS

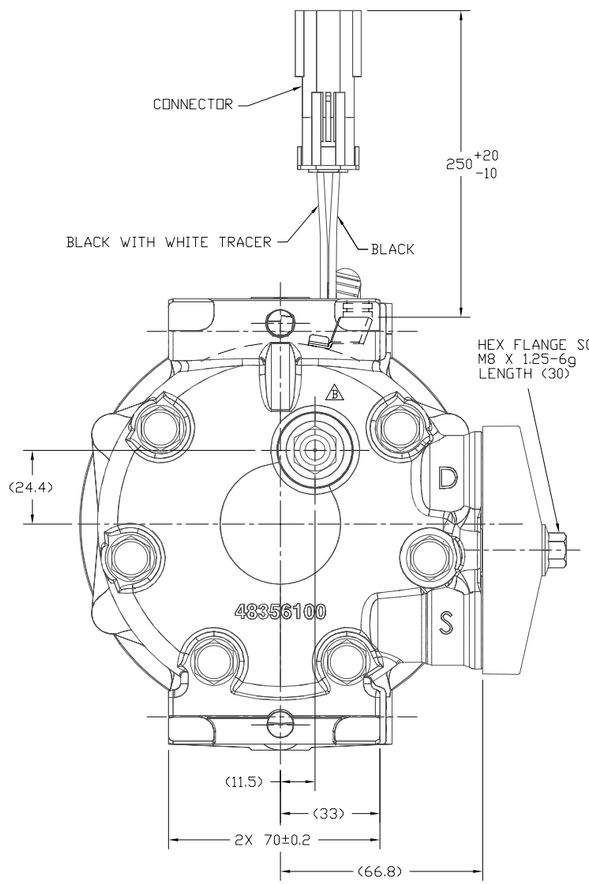

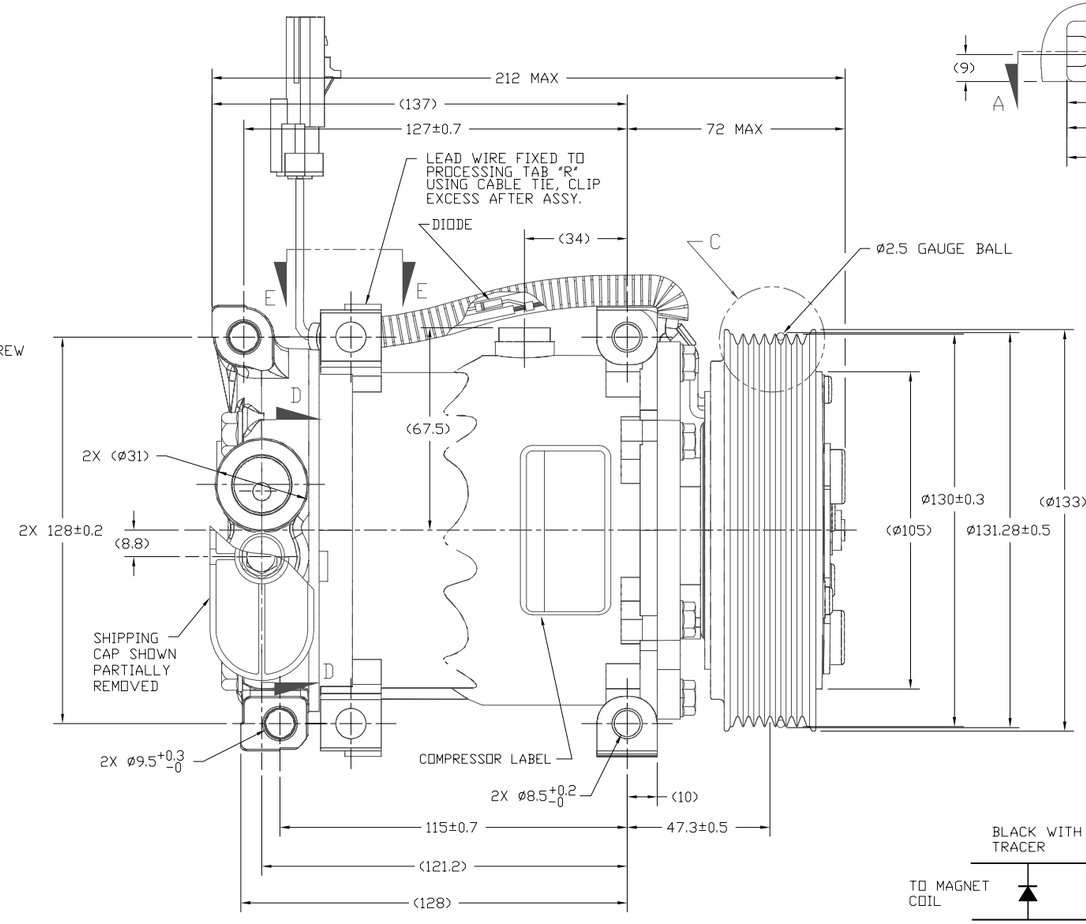

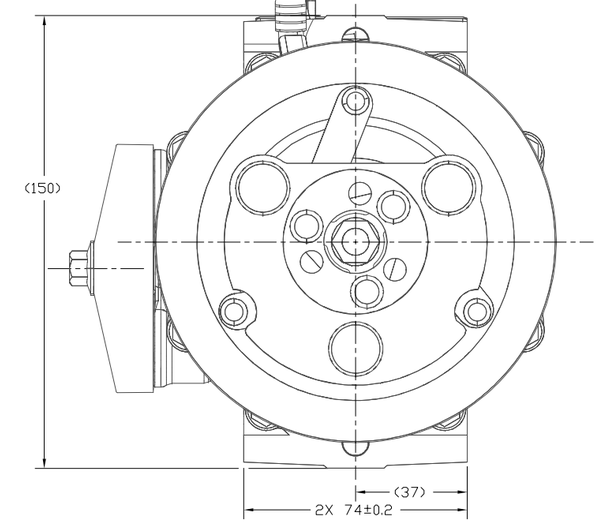

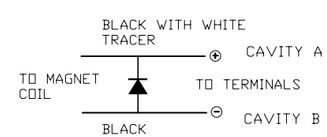

DIODE POLARITY

COMPRESSOR SPECIFICATIONS (REF)

DISPLACEMENT PER REVOLUTION	154.9 cc / rev. (9.5cu.in. / rev.)
MAXIMUM ALLOWABLE R.P.M.	8000 r.p.m.
MAXIMUM ALLOWABLE CONTINUOUS R.P.M.	6000 r.p.m.
REFRIGERANT	R134a
OIL (SP-15)	180 cc ±10 cc (6.1 fl.oz.)
WEIGHT	7.5 kg (16.5 lb.) REF
PRV OPENING PRESSURE RANGE	508-595 PSIG (35.7-41.8 kg/cm^2 G)

CLUTCH SPECIFICATIONS (REF)

RATED VOLTAGE	DC 12V
BREAKAWAY TORQUE	3.5 kgf-m MIN @ 12V
MINIMUM ENGAGEMENT VOLTAGE	7.5V max @ AIR GAP 0.6mm
POWER CONSUMPTION	49 WATTS MAX REF
BELT TYPE	PV7
MAXIMUM ALLOWABLE BELT TENSION	105 kgf
PULLEY DIAMETER	(Ø130)
CLUTCH TYPE	STANDARD

NOTES:

1. COMPRESSOR MUST CONFORM TO SANDEN SANDEN STD. SIA - ES 2002 REV. B.
2. N_2 HOLDING CHARGE DELETED.

DO NOT SCALE

REV. LEVEL		
A	RELEASED FOR: ENG'G. DEVELOPMENT	DSGN Jimmy Waldrop 7/27/05
		DWN Dennis Lee 7/6/05
		CHK DRL
		APPV. NBurns
		APPV. DATE JUL 27 2005
A	RELEASED FOR: DESIGN VALIDATION	DSGN Jimmy Waldrop 7/27/05
		APPV. NBurns
		APPV. DATE JUL 27 2005
A	RELEASED FOR: PRODUCTION VAL'D.	DSGN Jimmy Waldrop 7/27/05
		APPV. NBurns
		APPV. DATE JUL 27 2005
A	RELEASED FOR: PRODUCTION	DSGN Jimmy Waldrop 7/27/05
		APPV. NBurns
		APPV. DATE JUL 27 2005

SANDEN
SANDEN INTERNATIONAL (U.S.A.), INC.

DRAWN SCALE REF 1:1 | PLOTTED SCALE REF 1:1 | METRIC

This drawing and the information contained hereon are CONFIDENTIAL and PROPRIETARY to Sanden International (U.S.A.), Inc., are received in CONFIDENCE and shall not be used, copied, or disclosed to others without the written permission of Sanden International (U.S.A.), Inc.

INTERPRETATION OF THIS DRAWING PER ASME Y14.5M-1994

THIRD ANGLE PROJECTION | SIZE D

MATERIAL:

NAME: COMPRESSOR

DWG. NO. 4356-6000 | REV B