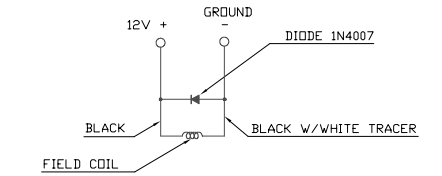

CIRCUIT DIAGRAM

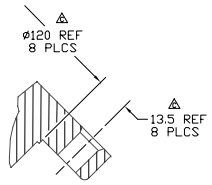

SECTION A-A

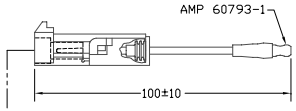

ASSEMBLED COMPRESSORS TO HAVE CONNECTORS ENGAGED

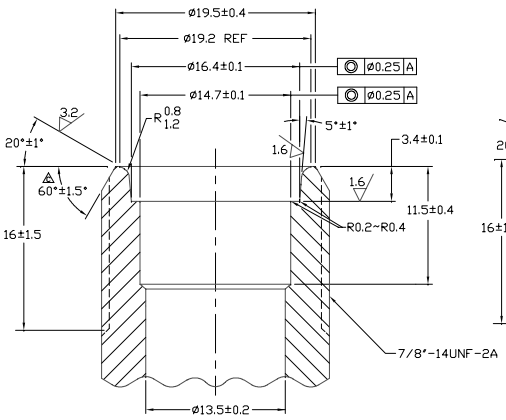

SECTION B-B

SCALE 4:1
(SHIPPING CAP REMOVED)

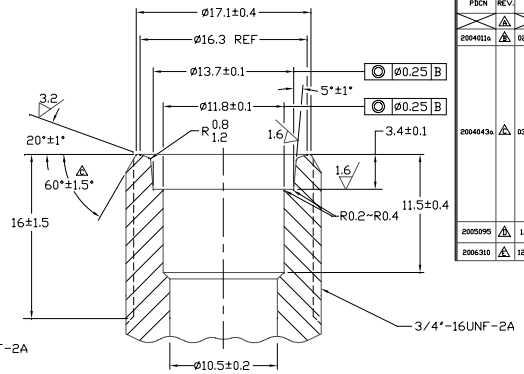

SECTION C-C

SCALE 4:1
(SHIPPING CAP REMOVED)

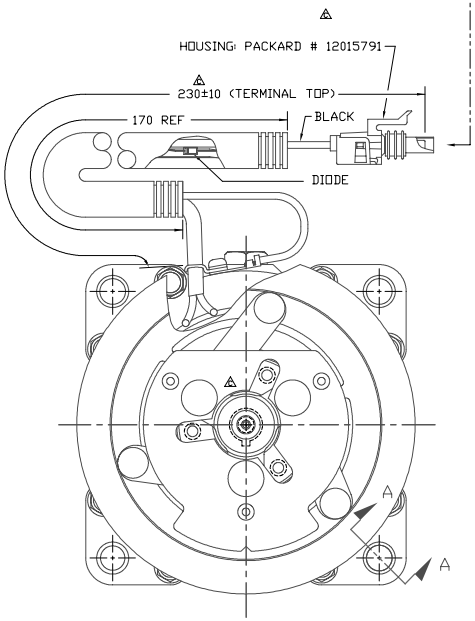

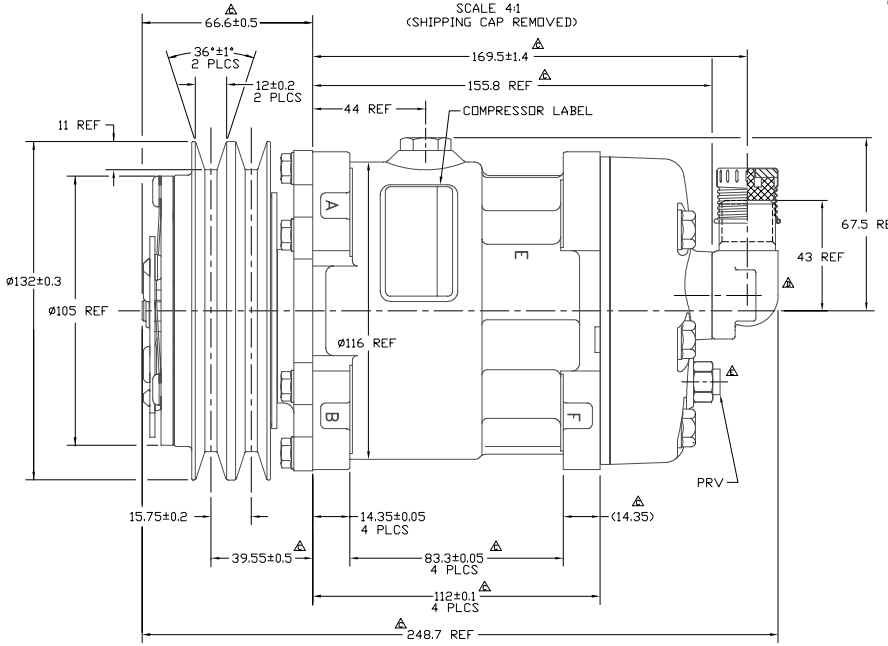

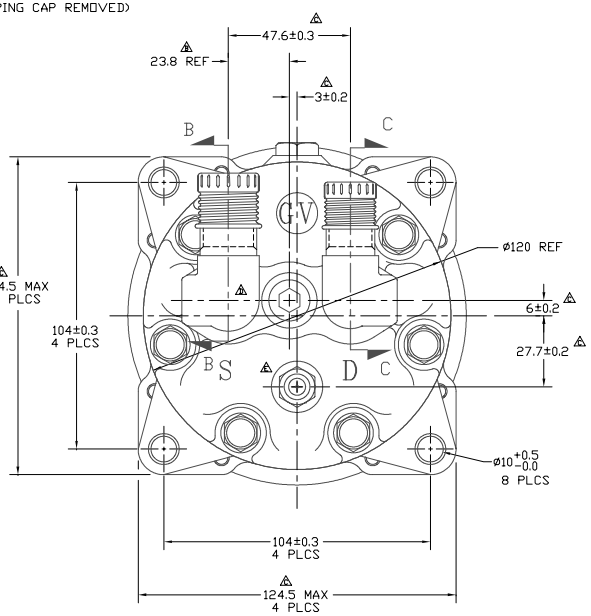

PDCN	REV.	APPV DATE	REVISIONS	DWN	DSGN	CHK	APPV
	A		INITIAL ISSUE				
2004011a	A	02/16/04	23.8 REF WAS 23.8±0.2	RSR	MH	DRL	NB
2004043a	A	03/25/04	CHANGED FRONT VIEW OF ARMATURE. CIRCUIT DIAGRAM WAS DIODE POLARITY; 230±10 (TERMINAL TOP) WAS 230 +50 -10 (TERMINAL TOP); 7.7 Kg (17.0 LBS) WAS 7.9 Kg (17.4 LBS); 66.6±0.5 WAS 66.6 REF; 83.3±0.05, 4 PLCS WAS 83.3±0.1; 169.5±1.4 WAS 169.4±1.5; 248.7 REF WAS 248.1 REF; 124.5 MAX 4 PLCS WAS 124.6 MAX 4 PLCS; 47.6±0.3 WAS 47.6±0.2; 3±0.2 WAS 3 REF; 6±0.2 WAS 6 REF; 27.7±0.2 WAS 27.7 REF; (14.35) WAS 14.35 REF, 4 PLCS; 83.3±0.5, 4 PLCS WAS 83.3±0.05; 112±0.1, 4 PLCS WAS 112±0.1; 39.55±0.5 WAS 39.55±0.5; REMOVED TERMINAL: PACKARD # 12124586, 30" REF, 4862-0406. ADDED 155.8 REF Ø120 REF, 8 PLCS WAS Ø120 REF 13.5 REF, 8 PLCS WAS 13.5 REF	JS	MH	KS HF DRL	JC
2005095	A	1/26/06	ADAPTER 4866-6340 REV. B WAS ADAPTER 4866-1340 REV. D	JS	JB 1/26/06	DRL	NB
2006310	A	12/11/06	PRV 4307-6470 WAS 4967-6470	JS	JW	DRL	TK

COMPRESSOR SPECIFICATIONS (REF)

DISPLACEMENT PER REVOLUTION	154.9 cc / rev. (9.5 cu. in. / rev.)
MAXIMUM ALLOWABLE R.P.M.	7000 R.P.M.
MAXIMUM ALLOWABLE CONTINUOUS R.P.M.	6000 R.P.M.
REFRIGERANT	R134a
OIL (SP-15)	200 cc (6.76 fl.oz.)
A WEIGHT	7.7 Kg (17.0 LBS)

CLUTCH SPECIFICATIONS (REF)

RATED VOLTAGE	DC 12V
BREAKAWAY TORQUE	3.5 kgf-m MIN. @ 12V REF
MINIMUM ENGAGEMENT VOLTAGE	7.5V @ AIR GAP 0.6mm REF
POWER CONSUMPTION	49 Watts MAX.
BELT TYPE	A TYPE
MAXIMUM ALLOWABLE BELT TENSION	60 kgf PER BELT
PULLEY DIAMETER	Ø132 mm (5.2 in.)
CLUTCH TYPE	HEAVY DUTY

DO NOT SCALE

REV. LEVEL	RELEASED FOR: ENG'G DEVELOPMENT	
A	DSGN	Mark Harrington
	DWN	J Sokolowski
	CHK	Dennis Lee 12/19/03
	APPV	NB
	APPV. DATE	DEC 23 2003
REV. LEVEL	RELEASED FOR: DESIGN VALIDATION	
C	DSGN	Matt Dworaczyk
	APPV.	KS HF NB RG 06/09/04
	APPV. DATE	06/23/04
REV. LEVEL	RELEASED FOR: PRODUCTION VAL'D.	
C	DSGN	Matt Dworaczyk
	APPV.	KS HF NB RG
	DATE	06/23/04
REV. LEVEL	RELEASED FOR: PRODUCTION	
	DSGN	
	APPV.	
	APPV. DATE	

SANDEN
SANDEN INTERNATIONAL (U.S.A.), INC.

DRAWN SCALE REF 1:1 | PLOTTED SCALE REF 1:1 | METRIC

This drawing and the information contained hereon are CONFIDENTIAL and PROPRIETARY to Sanden international (U.S.A.), inc., are received in CONFIDENCE and shall not be used, copied, or disclosed to others without the written permission of Sanden International (U.S.A.), inc.

INTERPRETATION OF THIS DRAWING PER ASME Y14.5M-1994

THIRD ANGLE PROJECTION | SIZE D

MATERIAL:

NAME: COMPRESSOR

DWG. NO. 4457-6000 | REV. E