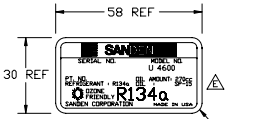

DETAIL F

VIEW E-E

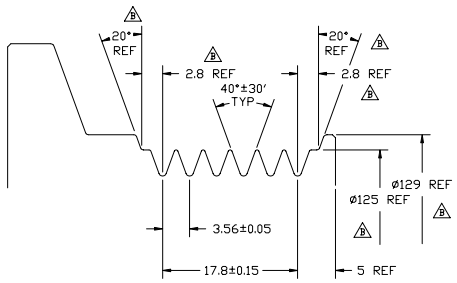

DETAIL B

SCALE: 3:1

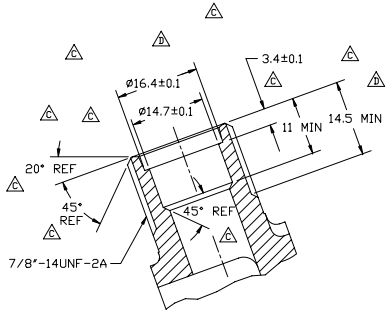

SECTION C-C

SCALE: 2:1
(SECTION SHOWN WITH SEAL CAP REMOVED)

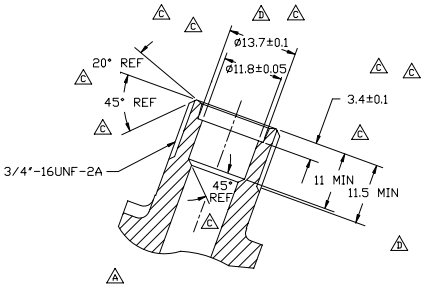

SECTION D-D

SCALE: 2:1
(SECTION SHOWN WITH SEAL CAP REMOVED)

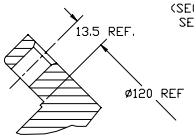

SECTION A-A

PDCN	REV.	APPV DATE	REVISIONS	DWN	DSGN	CHK	APPV
SC-73	A	12/20/91	CHANGED CYL. HEAD "MD" TO "JD", OIL AMOUNT: 240 TO 270, 67 MAX TO 71 MAX, 225 REF TO 214.1 REF, AND TERMINAL WIRES: AVX 1.25 (GREEN) TO AVX 1.25 (RED), AVX 1.25 (GREEN/WHITE) TO AVX 1.25 (RED). ADDED DUST COVER. SECTION(D-D, VIEW(E-E. REVISED SECTION(C-C AND DETAIL(B.	JPW	SRR	R.M.A	SRR 12/20/91
SC-202	B	6/5/92	CHG: 36.16±0.3 WAS 39.55±0.3; 2.8 REF WAS 2.5; 5 REF WAS 5±0.3; 20° REF WAS 20°; 17.8±0.15 WAS 17.8±0.1; Ø125±0.3 WAS Ø125 REF; 3.5 kg-m WAS 3.3 kg-m; 43 watts max WAS 49 watts max; 90 kgf WAS 120 kgf. SD7H15JD4600 WAS F.N.H.; SHD COMPRESSOR WAS OUTLINE- SD7155HD. AEX 2 (BLACK) WAS AUX 1.25 (RED). ADD: Ø129 REF AND Ø125 REF; REF: SAIA-0066 REV.B; LABEL AND DIMS. CHG: DWG NO. SAIA-0066 TO 4600-6000. SP-20 WAS SAIO-0024.	SRR	SRR	R.M.A	JSB
853	C	8/28/92	CHG 129±0.7 WAS 129±0.1, Ø19.2 REF WAS Ø19.2±0.1, 5° REF WAS 5°±1°, 45° REF WAS 45°±1°, 20° REF WAS 20°±1°, 6.3/ REF WAS 6.3/, 1.6/ REF WAS 1.6/, Ø16.3 REF WAS Ø16.3±0.1	RHX	DJ	DJ	JB
93214			CHANGED ARMATURE DUST COVER BOLTS FROM HEX TYPE TO TORX TYPE.				
95068	D	10/30/95	ELIMINATED 3 DUST COVER BOLTS. REVISED TO CURRENT SPECS.	JB	DRR	D.A.O	R.M.A
95390			CHANGED ARMATURE DUST COVER.				
2001340	E		OIL SP-15 WAS SP-20	JB			

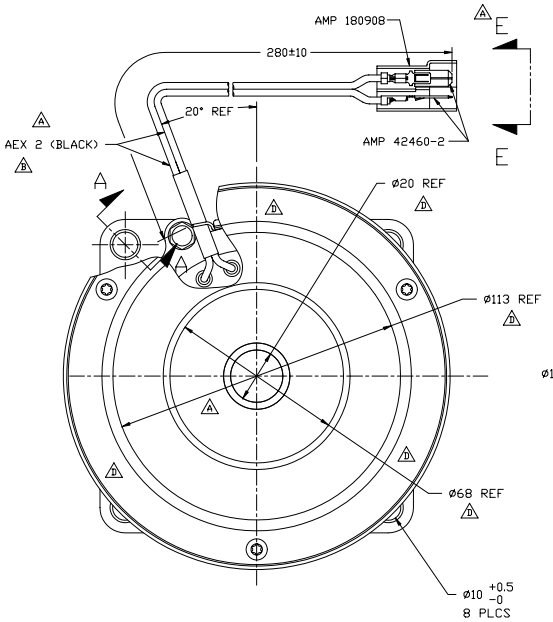

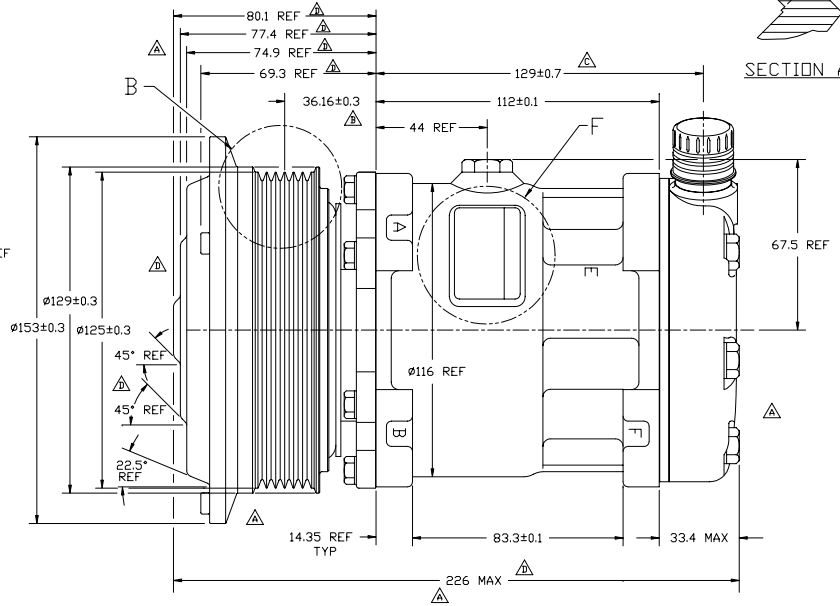

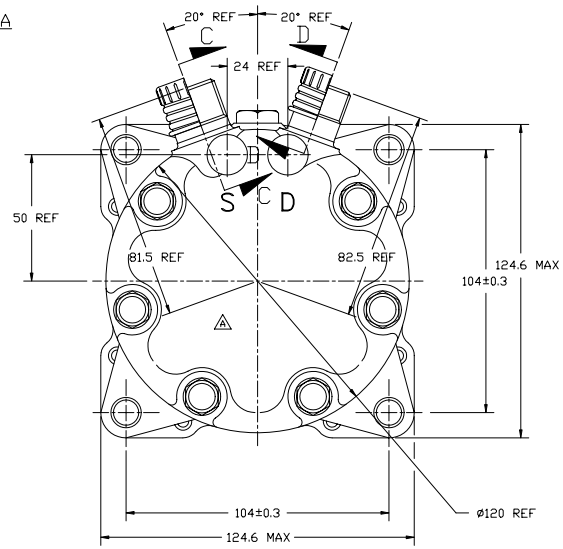

COMPRESSOR SPECIFICATIONS

DISPLACEMENT PER REVOLUTION	154.9 cc / rev. (9.5cu.in. / rev.)
MAXIMUM ALLOWABLE R.P.M.	6000 R.P.M.
MAXIMUM ALLOWABLE CONTINUOUS R.P.M.	4000 R.P.M.
REFRIGERANT	R134a
OIL (SP-15)	270 cc (9.1 fl.oz.)

CLUTCH SPECIFICATIONS

RATED VOLTAGE	DC 12V
BREAKAWAY TORQUE	3.5 kgf-m min. @ 12V
MINIMUM ENGAGEMENT VOLTAGE	7.5V @ AIR GAP 0.6mm
POWER CONSUMPTION	43 watts max.
BELT TYPE	PV6 TYPE
MAXIMUM ALLOWABLE BELT TENSION	90 kgf
PULLEY DIAMETER	Ø125mm (4.92 in.)
CLUTCH TYPE	HEAVY DUTY

DO NOT SCALE

REV. LEVEL	RELEASED FOR: ENGIN. DEVELOPMENT	SANDEN INTERNATIONAL (U.S.A.), INC.
A~D	DSGN Ramesh Lee 3/20/91; DWN Ramesh Lee 3/20/91; CHK Ed Arnold 4/11/91; APPV. R. R. Yanson 4/12/91; APPV. 4/12/91	DRAWN SCALE REF 1:1; PLOTTED SCALE REF 1:1; METRIC
REV. LEVEL	RELEASED FOR: DESIGN VALIDATION	This drawing and the information contained hereon are CONFIDENTIAL and PROPRIETARY to Sanden International (U.S.A), Inc., are received in CONFIDENCE and shall not be used, copied, or disclosed to others without the written permission of Sanden International (U.S.A), Inc.
A~D	DSGN Ramesh Lee 3/20/91; APPV. R. R. Yanson 4/12/91; APPV. 4/12/91	INTERPRETATION OF THIS DRAWING PER ASME Y14.5M-1994; THIRD ANGLE PROJECTION; SIZE D
REV. LEVEL	RELEASED FOR: PRODUCTION VAL'D.	MATERIAL:
A~D	DSGN Ramesh Lee 3/20/91; APPV. R. R. Yanson 4/12/91; APPV. 4/12/91	NAME: COMPRESSOR
REV. LEVEL	RELEASED FOR: PRODUCTION	
A~D	DSGN Ramesh Lee 3/20/91; APPV. R. R. Yanson 4/12/91; APPV. 4/12/91	DWG NO. 4600-6000 B; REV. E