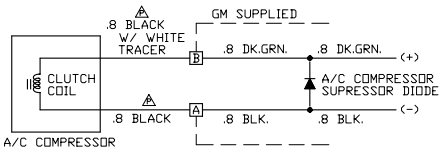

REFERRAL INFO. ONLY

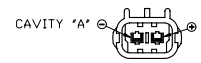

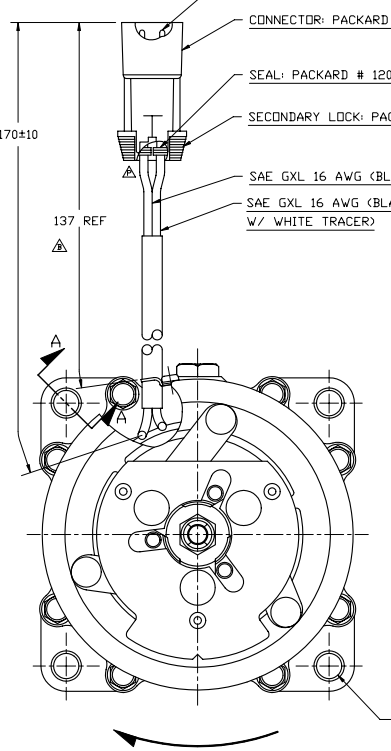

CLOCKWISE ROTATION

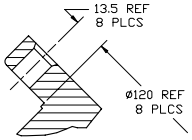

SECTION A-A

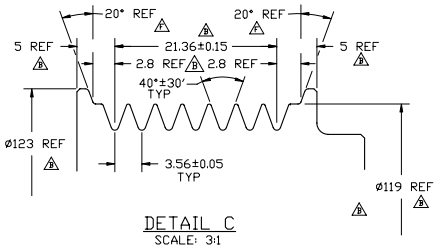

DETAIL C
SCALE: 3:1

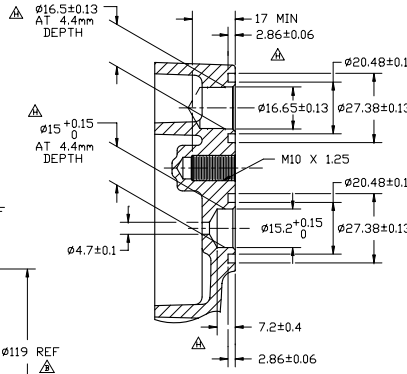

SECTION E-E
(SECTION WITH O-RINGS, SHIPPING PAD ASSEMBLY, AND BOLT REMOVED)

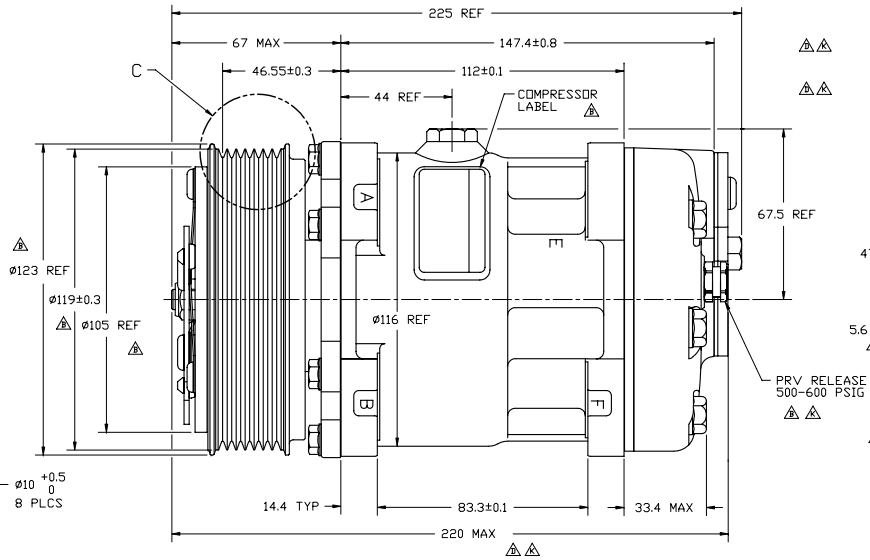

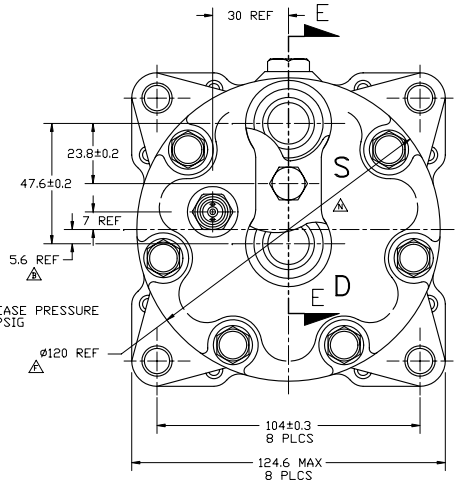

PDCN	REV.	APPV DATE	REVISIONS	DWN	DSGN	CHK	APPV
SC175		3/31/92	CHANGED OIL AMT. FROM 175cc TO 240cc	RH	DT	DT	JB
794	B	6/28/92	ADD: 137 REF; COIL RESISTANCE @ 20°C; 3.15±0.15 OHMS; COIL RESISTANCE @ 120°C; 4.4 OHMS NORMAL); ROTATION DIRECTION; LABEL; PRV RELEASE PRESSURE 500-600 PSIG; 2.8 REF; #119(4.3); MODEL NO.; NOTE 1; CHG: RATED VOLTAGE DC 12V; TO MAXIMUM RATED VOLTAGE DC 16V; MINIMUM ENGAGEMENT VOLTAGE 7.5V @ AIR GAP 0.6mm; TO MINIMUM ENGAGEMENT VOLTAGE 9.3VDC @ AIR GAP 0.8mm; 56 REF WAS 56(2.2); BREAKAWAY TORQUE 3.5 kgf-m min. @ 12V; to 3.3 kgf-m min @ 12V; 105 kgf WAS 140kgf; #119 (4.685 in) WAS #123mm (4.843 in); #123 REF WAS #123±0.3; 5 REF WAS 5±0.3; 2.8 REF WAS 2±0.2; 21.36±0.15 WAS 21.36±0.1; #119 REF WAS #119±0.3; #105 REF ROTOR WAS #120 REF ROTOR; COMPRESSOR WAS OUTLINE-SD7155HD; 4618-6000 WAS SA10-0039 RMD: 9.94±0.15; 2±0.2; #111±0.3; CLUTCH WEIGHT; MAXIMUM ALLOWABLE R.P.M. 8100 R.P.M.; MAXIMUM ALLOWABLE CONTINOUS RPM 6000 RPM;	DRL	DRL	EMA	JB
93-058	C	6/28/92	DELETED PT. NO. 15956082	PW	DRL	EMA	JB
93284 93310	D	9/21/93 9/29/93	CHANGED OVERALL LENGTH FROM 236.4 MAX TO 237.6 MAX ADDED "PT. NO. 15956082" TO LABEL.	RH PW	RH PW	DRL	EMA
94130	E	5/6/94	CHANGED TERMINAL P/N FROM FROM 12040559 TO 12048159	RH	RH	RK	EMA
95203	F	2/23/96	ADDED PROPRIETARY NOTE AND UPDATED TO CURRENT STANDARDS	RH	EMA	DRL	EMA TS
96515	G	12/13/96	ADDED NOTE 2	RH	DD	DRL	EMA TS
97522 95203	H	12/13/96	ADDED 4.4mm DEPTH TO SECTION E-E REMOVED 4.4 REF (2 PLCS) UPDATED TO CURRENT STANDARDS	RH	DD	DRL	EMA TS
98394	J	1/12/99	SAE GXL 16 AWG (BLACK) WAS AXV 1.25 (RED). SAE GXL 16 AWG (BLACK W/ WHITE TRACER) WAS AXV 1.25 (RED)	JS	DS	DRL	EMA
2000024 2001027 99007	K	4/6/01	REVISE PRESSURE RELEASE VALVE 5.58 MAX WAS 6.41 MAX; 16.7 MAX WAS 27.5 MAX; 220 MAX WAS 237.6 MAX REVISE BORDER UPDATED DRAWING WITH EWO IN404E	JS	LK	DRL	DS
2001340	L	11/14/01	OIL SP-15 WAS SP-20 PER EWO# AGP2H	JS	LK	DRL	MY
2002071	M	03/22/02	ADDED "PER EWO# AGP2H" TO REV L DESCRIPTION	RSR	RG	NB 03/22/02	TS
2002078		7/17/02	SHIPPING PAD 1013-6330 WAS 9652-6330. PER EWO# AGL4B	DRL	RG	DRL	RG
2003070a	M	3/19/03	VA/VE CHANGES: LIP SEAL, VALVE PLATE AND LOCATION PIN. NO REV CHG TO ALIGN WITH GM. PER EWO# AKK7C	DRL	MAS	DRL	RG
2004105	N	8/27/04	CHANGED BLACK AND WHITE TRACER WIRE TO CAVITY "B" WAS CAVITY "A". CHANGED BLACK WIRE TO CAVITY "A" WAS CAVITY "B". CHANGED 0.8 BLACK W/ WHITE TRACER TO CAVITY "B" WAS 0.8 RED TO CAVITY "B" CHANGED 0.8 BLACK TO TO CAVITY "A" WAS 0.8 RED TO CAVITY "A". RATED VOLTAGE 12 VDC WAS MAXIMUM RATED VOLTAGE 16 VDC. BREAKAWAY TORQUE: 3.5 kgf-m min. @ 12V WAS 3.3 kgf-m min. @ 12V MINIMUM ENGAGEMENT VOLTAGE @ 20°C 7.5VDC @ AIR GAP 0.6mm NOM. WAS : 9.3VDC @ AIR GAP 0.8mm. REMOVED COIL RESISTANCE @ 20°C AND 121°C MAXIMUM ALLOWABLE BELT TENSION 120 kgf WAS 105 kgf. ADDED : CLUTCH TYPE HEAVY DUTY	JS	HF	DRL	RG

COMPRESSOR SPECIFICATIONS

DISPLACEMENT PER REVOLUTION	154.9 cc / rev. (9.5cu.in. / rev.)
MAXIMUM ALLOWABLE R.P.M.	8000 R.P.M.
MAXIMUM ALLOWABLE CONTINUOUS R.P.M.	6000 R.P.M.
REFRIGERANT	R-134a
OIL (SP-15)	240 cc (8.1 fl.oz.)
CUSTOMER PART NUMBER	15956082

CLUTCH SPECIFICATIONS

RATED VOLTAGE	DC 12V
BREAKAWAY TORQUE	3.5 kgf-m min. @ 12V
MINIMUM ENGAGEMENT VOLTAGE @ 20°C	7.5VDC @ AIR GAP 0.6mm NOM
POWER CONSUMPTION	49 watts max.
BELT TYPE	PV7 TYPE
MAXIMUM ALLOWABLE BELT TENSION	120 kgf
PULLEY DIAMETER	Ø119mm (4.685 in.)
CLUTCH TYPE	HEAVY DUTY

NOTE:
1. ANY CHANGES TO THIS DESIGN, INCLUDING ANY CHANGES TO DETAILS OF THE DESIGN NOT SHOWN ON THIS DRAWING, MUST BE APPROVED BY THE GM TRUCK & BUS DESIGN RESPONSIBLE ENGINEER, AND A REVISED DRAWING RELEASED WHICH HAS CHANGE DATES, CHANGE DESCRIPTION, AND CHANGE AUTHORITY FOR ALL CHANGES.
2. THIS PRODUCT MEETS THE REQUIREMENTS OF SANDEN ENGINEERING SPECIFICATION SES-CC-214.

DO NOT SCALE

REV. LEVEL	RELEASED FOR ENG'G DEVELOPMENT	
A	DSGN Dennis Lee 2/13/91	
	DWN Dennis Lee 2/13/91	
	CHK F.Fukai 2/14/91	
	APPV. BRH 2/14/91	
	APPV. DATE Davis 2/14/91	
REV. LEVEL	RELEASED FOR DESIGN VALIDATION	
A	DSGN Dennis Lee 2/13/91	
	APPV. BRH 2/14/91	
	APPV. DATE Davis 2/14/91	
REV. LEVEL	RELEASED FOR PRODUCTION VAL'D.	
A	DSGN Dennis Lee 2/13/91	
	APPV. BRH 2/14/91	
	APPV. DATE Davis 2/14/91	
REV. LEVEL	RELEASED FOR PRODUCTION	
A	DSGN Dennis Lee 2/13/91	
	APPV. BRH 2/14/91	
	APPV. DATE Davis 2/14/91	

SANDEN
SANDEN INTERNATIONAL (U.S.A.), INC.

DRAWN SCALE REF 1:1 | PLOTTED SCALE REF 1:1 | METRIC

This drawing and the information contained hereon are CONFIDENTIAL and PROPRIETARY to Sanden International (U.S.A.), Inc., are received in CONFIDENCE and shall not be used, copied, or disclosed to others without the written permission of Sanden International (U.S.A.), Inc.

INTERPRETATION OF THIS DRAWING PER ASME Y14.5M-1994

THIRD ANGLE PROJECTION | SIZE D

MATERIAL:

NAME SD7H15QD4618
COMPRESSOR

DWG. NO. 4618-6000 | REV. P