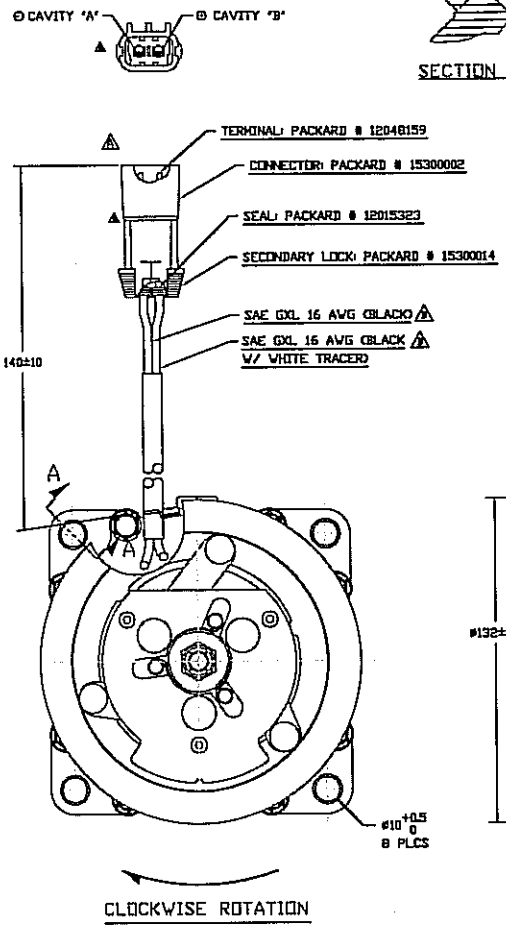

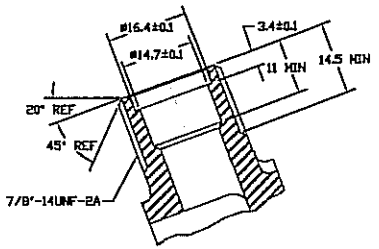

SECTION B-B
SCALE: 2:1
(SECTION SHOWN WITH SEAL CAP REMOVED)

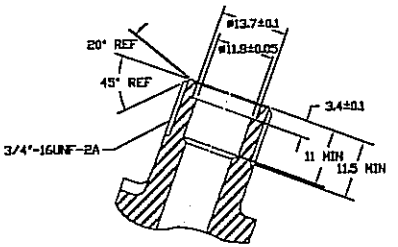

SECTION C-C
SCALE: 2:1
(SECTION SHOWN WITH SEAL CAP REMOVED)

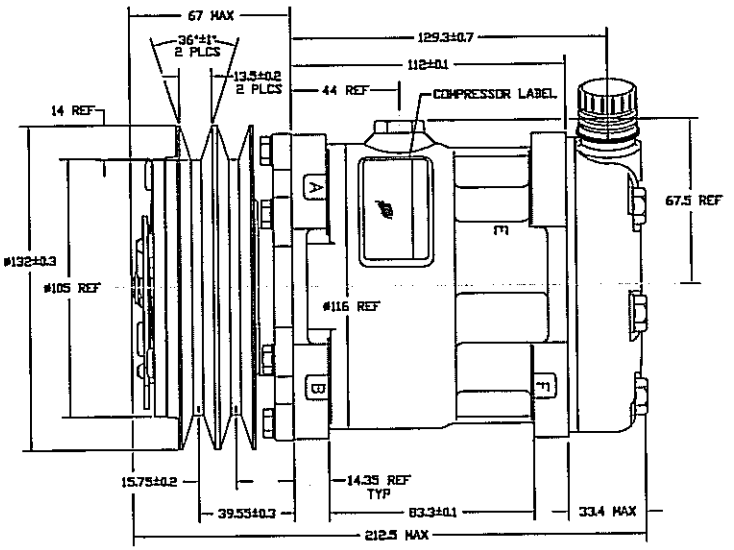

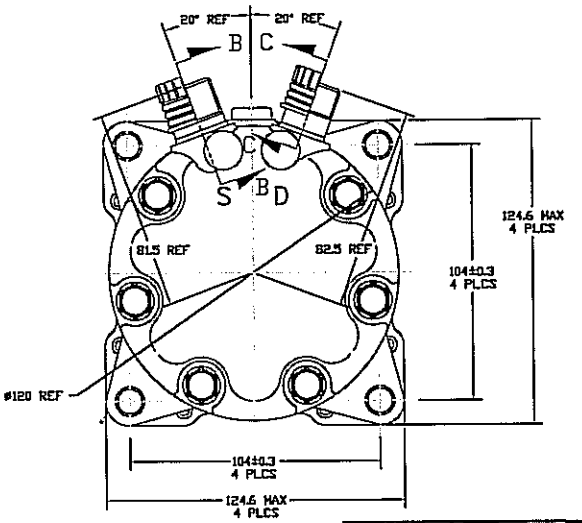

COMPRESSOR SPECIFICATIONS

DISPLACEMENT PER REVOLUTION	154.9 cc / rev. (9.5cu.in. / rev.)
MAXIMUM ALLOWABLE R.P.M.	8000 R.P.M.
MAXIMUM ALLOWABLE CONTINUOUS R.P.M.	6000 R.P.M.
REFRIGERANT	R134a
OIL (SP-15)	300 cc (10.1 FLoz.)
WEIGHT	7.4 kg (16.4 lb.)

CLUTCH SPECIFICATIONS

RATED VOLTAGE	DC 12V
BREAKAWAY TORQUE	3.5 kgf-m min. @ 12V
MINIMUM ENGAGEMENT VOLTAGE	7.5V @ AIR GAP 0.6mm REF
POWER CONSUMPTION	49 watts max.
BELT TYPE	A TYPE
MAXIMUM ALLOWABLE BELT TENSION	60 kgf per belt
PULLEY DIAMETER	ø132mm (5.2 in.)
CLUTCH TYPE	HEAVY DUTY

DO NOT SCALE

SANDEN

SCALE REF 1:1 | SCALE REF 1:1 | METRIC

INTERPRETATION OF THIS DRAWING PER ASME Y14.5M-1994

THIRD ANGLE PROJECTION

SIZE D

SCHEMATIC 5D7H05.JD4694

NAME COMPRESSOR

DWG. NO. 4694-6000 REV D