OFFICIAL DRAWING

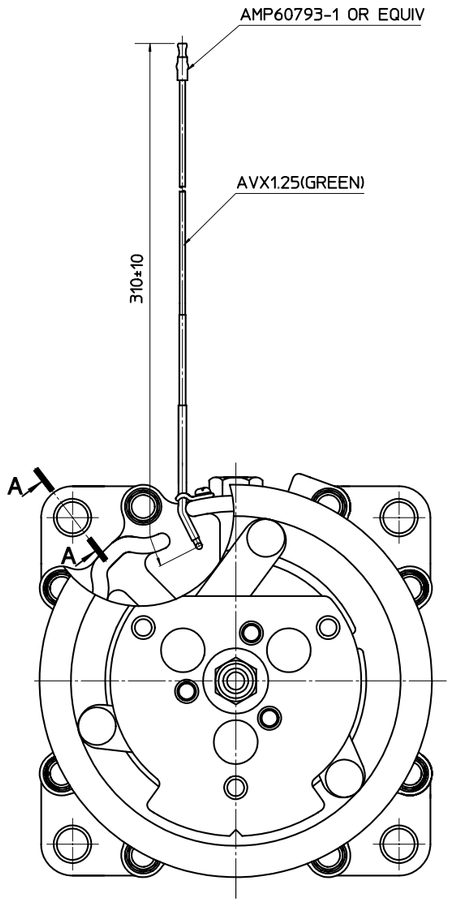

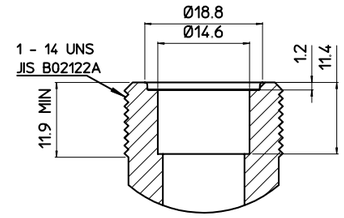

PARTIAL SECT C–C

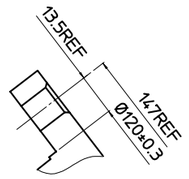

PARTIAL SECT A–A

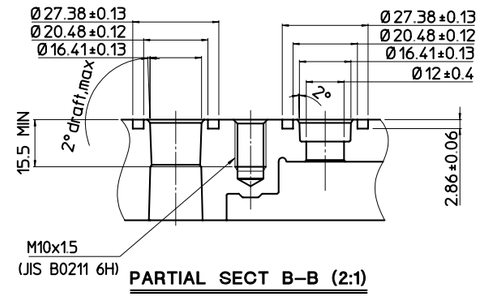

PARTIAL SECT B–B (2:1)

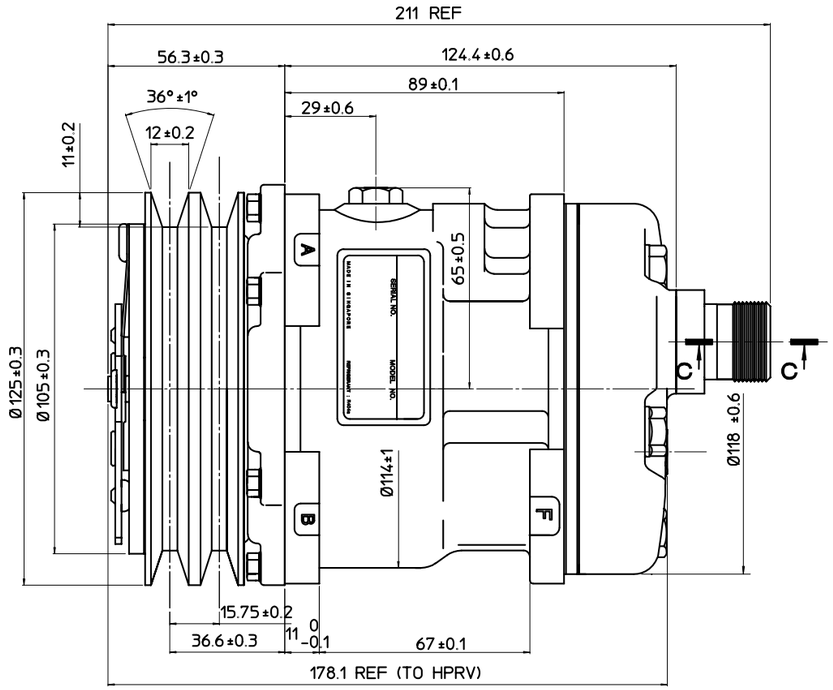

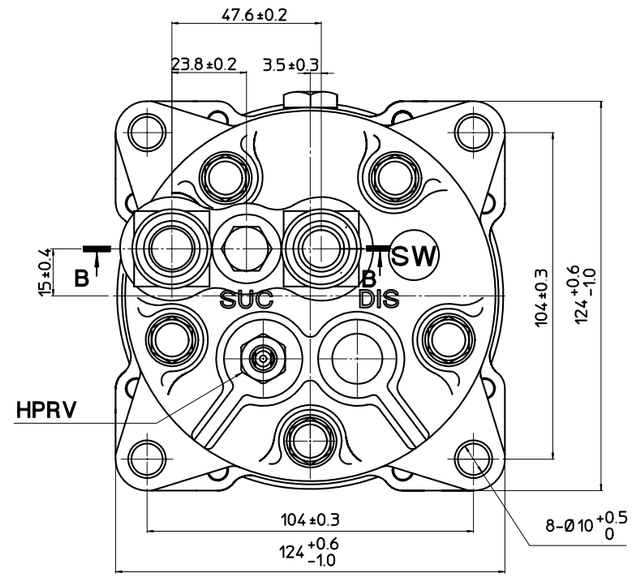

COMPRESSOR SPECIFICATIONS

BORE	Ø35 mm
STROKE	18.07 mm
DISPLACEMENT PER REVOLUTION	87 cc/rev
NUMBER OF CYLINDERS	5
MAXIMUM ALLOWABLE r.p.m.	4000 r.p.m.
MAXIMUM ALLOWABLE CONTINUOUS r.p.m.	3000 r.p.m.
REFRIGERANT	R404a
OIL(POE Mobil Artic 68)	0 cc
ROTATION(CLUTCH SIDE VIEW)	CLOCKWISE
WEIGHT	kg

CLUTCH SPECIFICATIONS

RATED VOLTAGE	DC 24 V
BREAKAWAY TORQUE	2.2 kg-m
MINIMUM ENGAGEMENT VOLTAGE	16 V max
POWER CONSUMPTION	34 W (Cu)
MAXIMUM ALLOWABLE r.p.m.	4000 r.p.m.
MAXIMUM ALLOWABLE CONTINUOUS r.p.m.	3000 r.p.m.
BELT TYPE	A
PULLEY DIAMETER	Ø125 mm
WEIGHT	kg

PRESSURE RELIEF VALVE SPECIFICATION

RELIEF PRESSURE	MINIMUM 35.7kgf/cm2G MAXIMUM 41.8kgf/cm2G
EXHAUST FLOW	MINIMUM 113NL/min at 44.8kgf/cm2G
RESEALED PRESSURE	MINIMUM 30.7kgf/cm2G

OFFICIAL
08.03.2007
CE 1632
SIS
ENGRG ADMIN

No.	REVISION RECORD	BY	DATE
△			. .
△			. .
△			. .
△			. .
△			. .

MATERIAL	PART NO. 5653HR		NAME COMPRESSOR
THIRD ANGLE PROJECTION	SCALE 1:1		
DESIGN BY	CHECKED BY	APPROVED BY	MODEL SD5L09SW5653HR
邹顺发 08.03.2007 Raymond	高橋正 08.03.2007 Masa.T.	高橋正 08.03.2007 Masa.T.	DRAWING NO. 5653HR-6000S

SANDEN INTERNATIONAL (SINGAPORE) PTE.LTD.

JIS A1 594 X 841