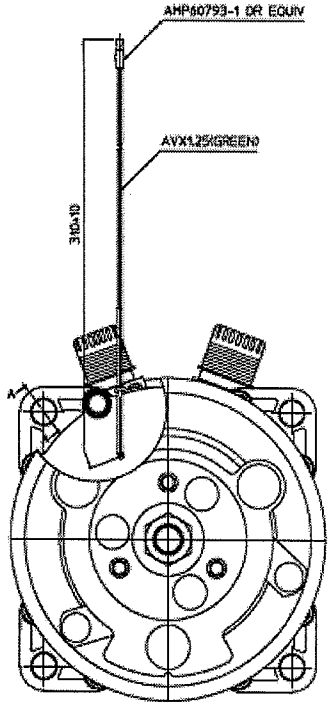

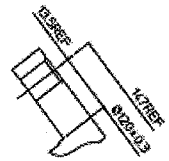

PARTIAL SECT A–A

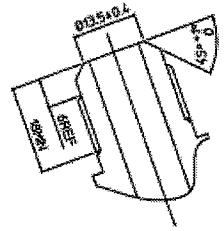

PARTIAL SECT B–B (2:1)

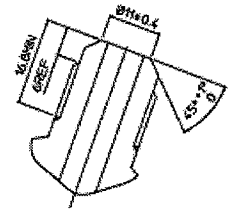

PARTIAL SECT C–C (2:1)

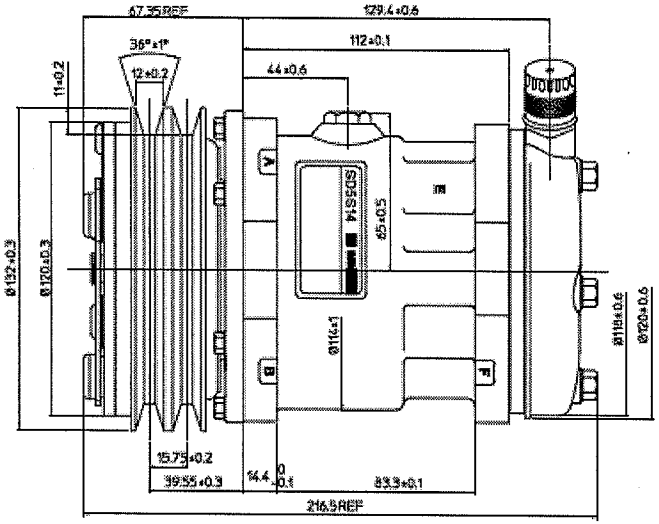

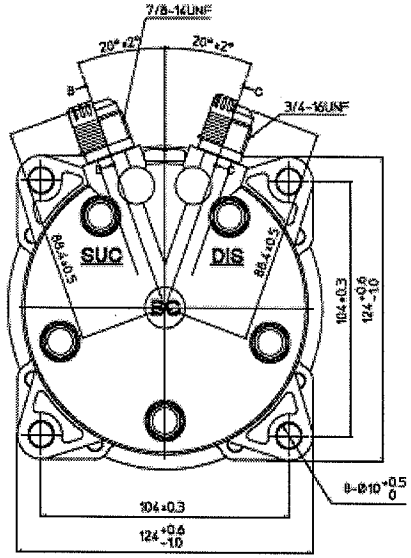

NOTICE

These drawings or print contains proprietary and confidential information and is made available to the Recipient on expressed and specific conditions that neither it nor the information contained therein shall be disclosed or made available to any third party(s) without the expressed and specific written consent of Sanden International (Singapore) Pte Ltd. These drawings or print shall not be copied or duplicated in any manner or to any extent without Sanden's prior expressed and specific written consent.

COMPRESSOR SPECIFICATIONS

BORE	Ø35 mm
STROKE	28.6 mm
DISPLACEMENT PER REVOLUTION	138 cc/rev
NUMBER OF CYLINDERS	5
MAXIMUM ALLOWABLE r.p.m.	7000 r.p.m.
MAXIMUM ALLOWABLE CONTINUOUS r.p.m.	6000 r.p.m.
REFRIGERANT	R134A
OIL(SP-20 OR EQUIV.)	135 cc
ROTATION(CLUTCH SIDE VIEW)	CLOCKWISE
WEIGHT	kg

CLUTCH SPECIFICATIONS

RATED VOLTAGE	DC 24 V
BREAKAWAY TORQUE	3.5 kg-m
MINIMUM ENGAGEMENT VOLTAGE	16 V max
POWER CONSUMPTION	42 W (Cu)
MAXIMUM ALLOWABLE r.p.m.	7000 r.p.m.
MAXIMUM ALLOWABLE CONTINUOUS r.p.m.	6000 r.p.m.
BELT TYPE	A2
PULLEY DIAMETER	Ø132 mm
WEIGHT	kg

No.	REVISION RECORD	BY	DATE
1			
2			
3			
4			
5			

MATERIAL	
PART NO.	6622
SCALE	1:1
NAME	COMPRESSOR
MODEL	SD5S14BC6622
DRAWING NO.	6622-6000S

SANDEN INTERNATIONAL (SINGAPORE) PTE LTD.