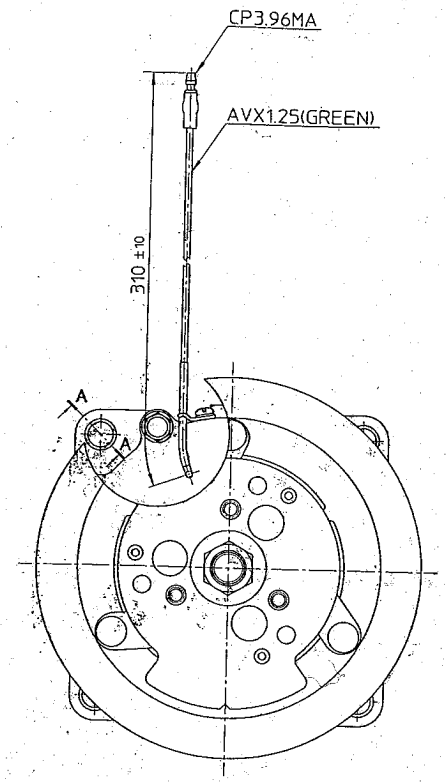

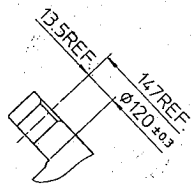

PARTIAL SECT. A–A

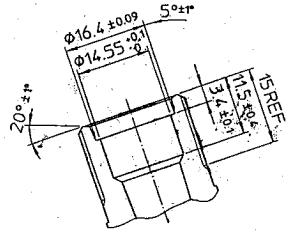

PARTIAL SECT.B–B(2:1)

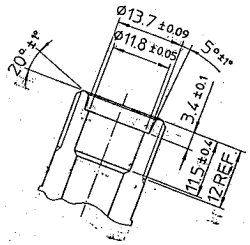

PARTIAL SECT.C–C(2:1)

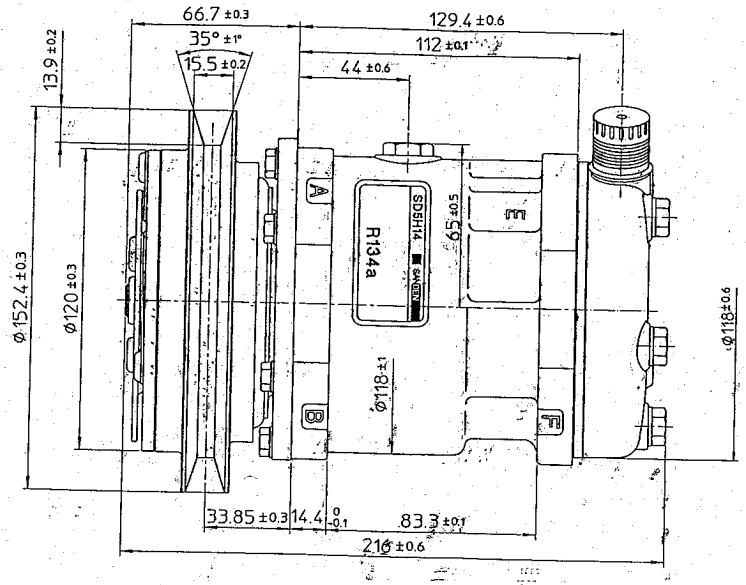

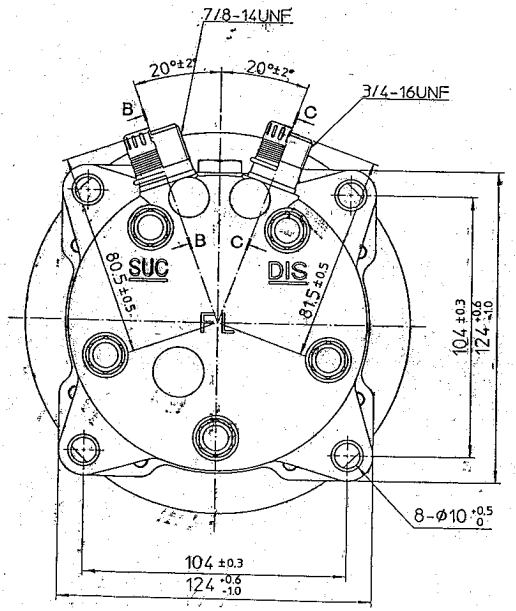

COMPRESSOR SPECIFICATIONS

BORE	Ø35 mm (1.38 in.)
STROKE	28.6 mm (1.13 in.)
DISPLACEMENT PER REVOLUTION	138 cc/rev.(8.4 cu.in./rev.)
NUMBER OF CYLINDERS	5
MAXIMUM ALLOWABLE r.p.m.	7000 r.p.m.
MAXIMUM ALLOWABLE CONTINUOUS r.p.m.	6000 r.p.m.
REFRIGERANT	R-134a
OIL (SP-20 OR EQUIV.)	175 cc (5.9 fl.oz.)
WEIGHT	kg (lb)

CLUTCH SPECIFICATIONS

RATED VOLTAGE	DC 24 V
BREAKAWAY TORQUE	3.5 kg-m (25.3 ft-lb)
MINIMUM ENGAGEMENT VOLTAGE	16 V MAX.
POWER CONSUMPTION	42 W (CU)
MAXIMUM ALLOWABLE r.p.m.	7000 r.p.m.
MAXIMUM ALLOWABLE CONTINUOUS r.p.m.	6000 r.p.m.
BELT TYPE	B TYPE
PULLEY DIAMETER	Ø152.4 mm (6.0 in.)
WEIGHT	kg (lb)

NO	REVISION RECORD	BY	DATE
1	CHANGE OF OIL AMOUNT (135cc → 175cc)	YU	28 JUL 95

MATERIAL	PART NO 6633	NAME	COMPRESSOR
THIRD ANGLE PROJECTION	SCALE 1:1		
DESIGN BY	DATE 28 JUL 1995	MODEL	SD5H14FL6633
CHECKED BY	DATE 29 JUL 1995		
APPROVED BY	DATE 7 AUG 1995	DRAWING NO	6633-6000 A

SANDEN SANDEN CORPORATION SANDEN INTERNATIONAL CORPORATION