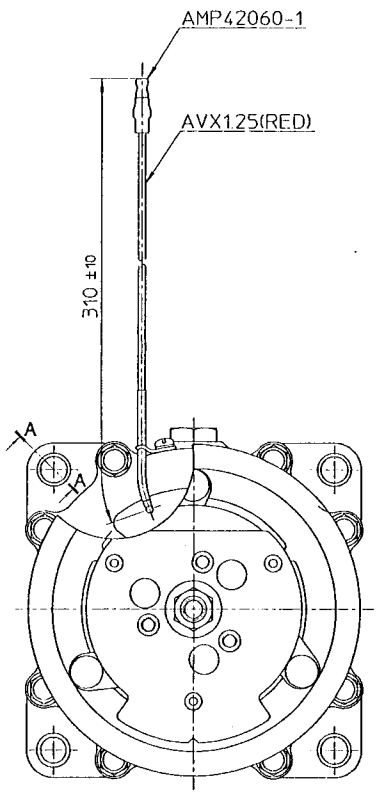

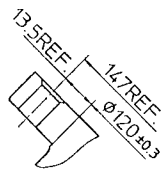

PARTIAL SECT. A–A

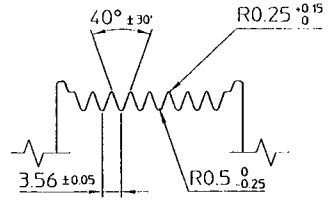

DETAIL OF ROTOR GROOVE (2:1)

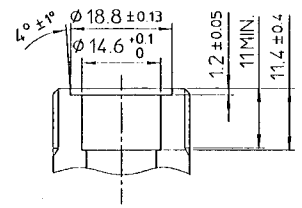

PARTIAL SECT. B–B (2:1)

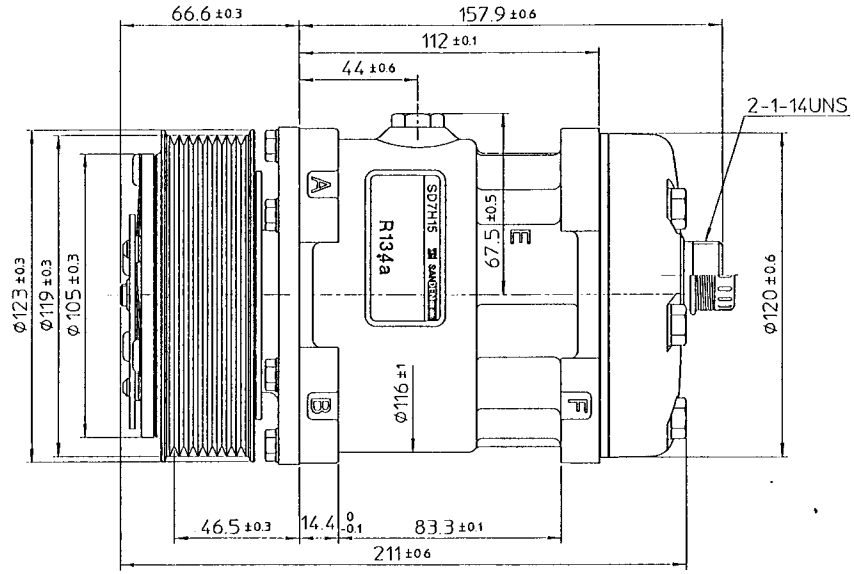

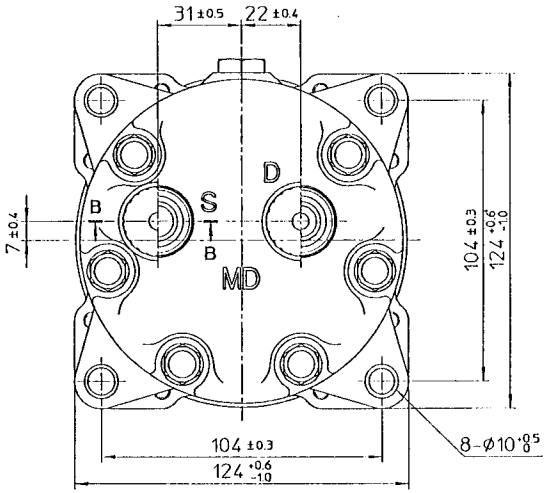

SIE UNCONTROLLED COPY

FOR INFORMATION ONLY

INITIAL DC

DATE 20/6/03

COMPRESSOR SPECIFICATIONS

BORE	ø 29.3	mm (1.15	in.)
STROKE	32.8	mm (1.29	in.)
DISPLACEMENT PER REVOLUTION	154.9	cc/rev.(9.5	cu.in./rev.)
NUMBER OF CYLINDERS	7		
MAXIMUM ALLOWABLE r.p.m.	7000	r.p.m.	
MAXIMUM ALLOWABLE CONTINUOUS r.p.m.	6000	r.p.m.	
REFRIGERANT	R-134a		
OIL : SANDEN (PAG)	240	cc (8.18	fl.oz.)
WEIGHT		kg (	lb)

CLUTCH SPECIFICATIONS

RATED VOLTAGE	DC 12 V		
BREAKAWAY TORQUE	3.5	kg-m (25.3	ft-lb)
MINIMUM ENGAGEMENT VOLTAGE	7.5	V MAX.	
POWER CONSUMPTION	49	W (CU)	
MAXIMUM ALLOWABLE r.p.m.	7000	r.p.m.	
MAXIMUM ALLOWABLE CONTINUOUS r.p.m.	6000	r.p.m.	
BELT TYPE	PV	TYPE	
PULLEY DIAMETER	ø119	mm (4.69	in.)
WEIGHT		kg (	lb)

NO	REVISION RECORD	BY	DATE
△			
△			
△			
△			
△			

MATERIAL		PART NO.	7822
THIRD ANGLE PROJECTION		SCALE	1 : 1
DESIGN BY		DATE	23-JUL-1992
CHECKED BY		DATE	24-JUL-1992
CHECKED BY		DATE	24-JUL-1992

NAME: COMPRESSOR

MODEL: SD7H15MD7822

DRAWING NO. 7822–6000

SANDEN SANDEN CORPORATION SANDEN INTERNATIONAL CORPORATION